





Electromechanical cylinders

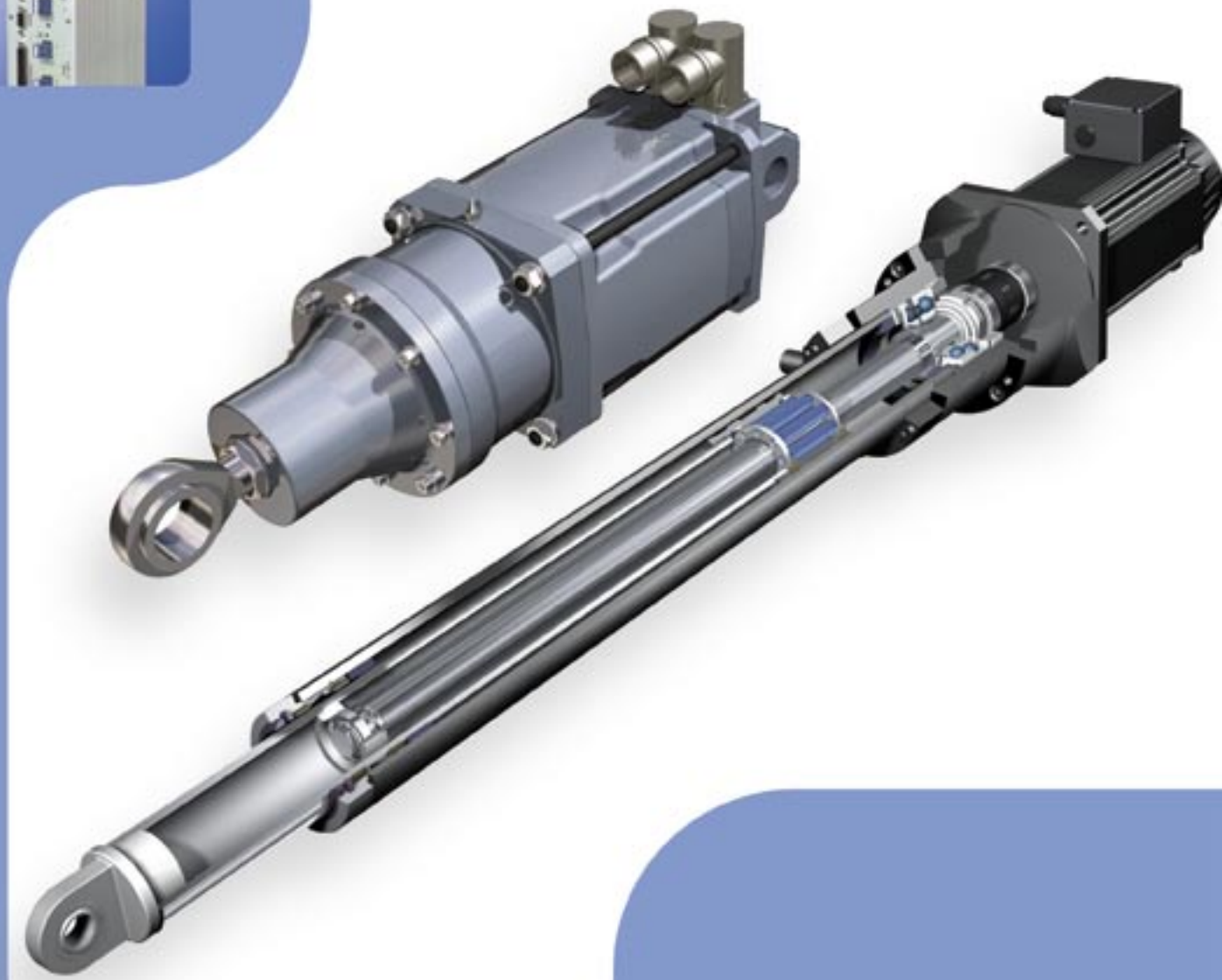

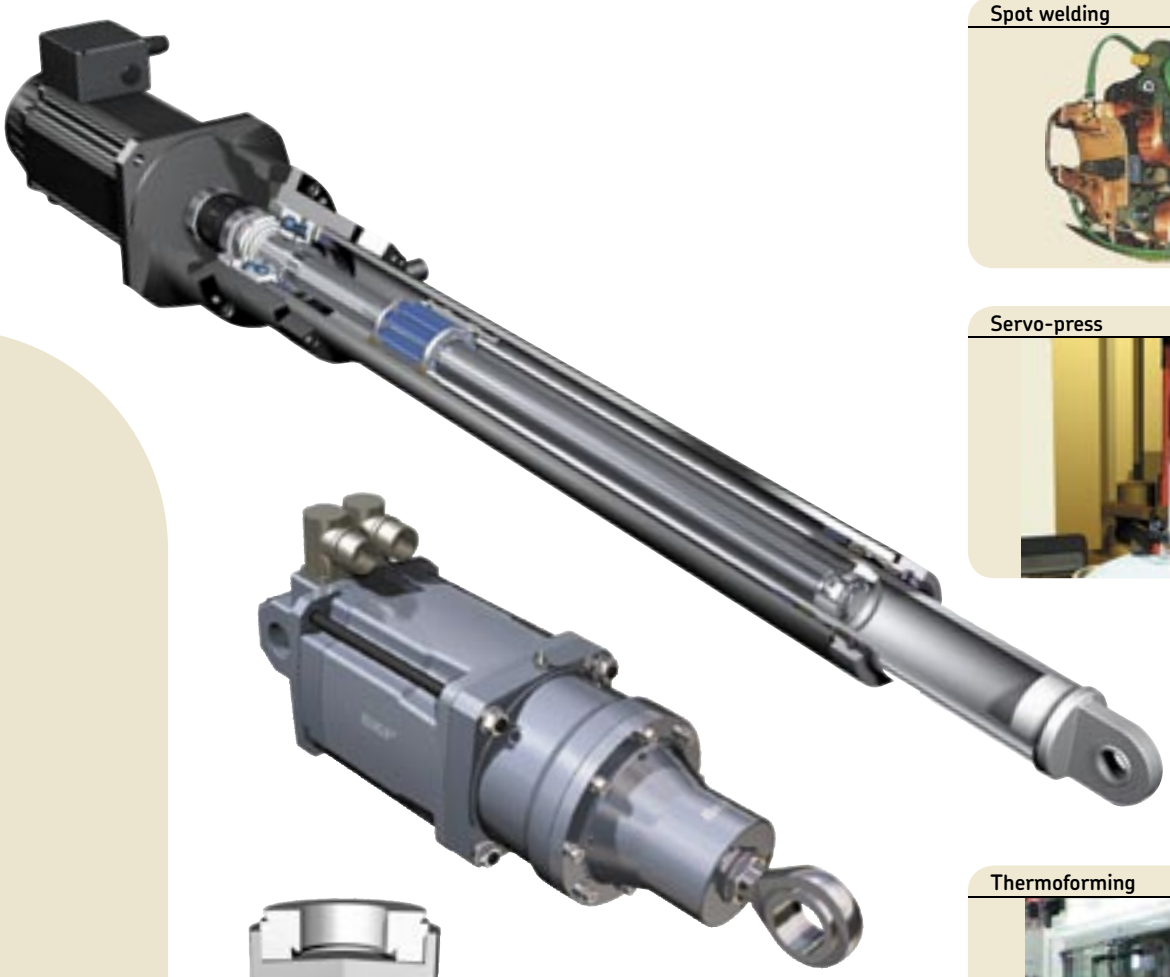

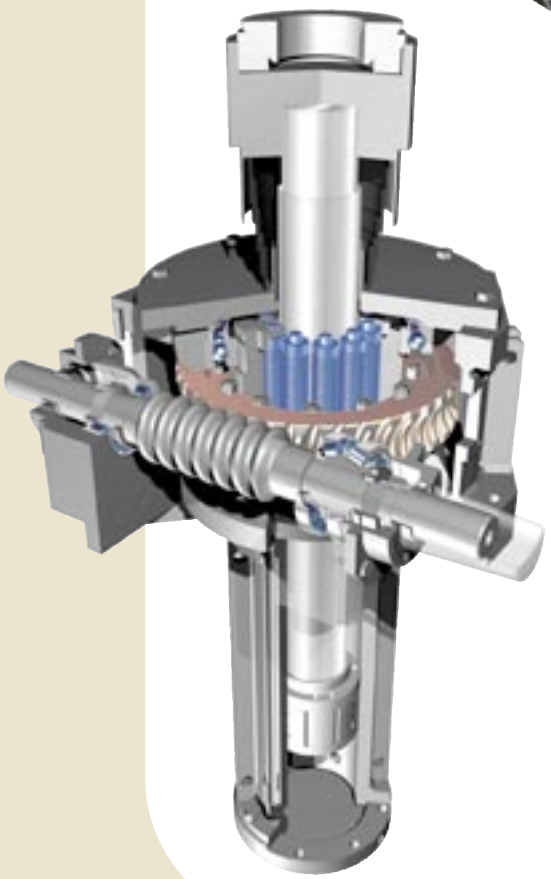

Spot welding



Servo-press



Thermoforming



Medical



Steel industry





Electromechanical cylinders: roller screw combined with brushless motor

SKF electromechanical cylinder benefits compared to other technologies ---- 05
Quick selection of product range ---- 06
Three ranges to meet your requirements ---- 07



Modular electromechanical cylinders

Description of the mechanism ---- 09
Main benefits ---- 09
Tailor-made solutions with very flexible choice ---- 09
Product range ---- 10
Quick size selection ---- 11
Quick motor selection ---- 12
Life time selection SRSA •• ---- 13
Designation ---- 16
Performance and dimensional specifications ---- 18
Option: High resolution ---- 30
Life time selection SVSA •• ---- 31
Performance and dimensional specifications ---- 32
Option: High speed ---- 38
Life time selection SLSA •• ---- 39
Performance and dimensional specifications ---- 40
Front attachment ---- 44



Compact electromechanical cylinders

The new standard for high performance motion ---- 47
Main benefits ---- 47
Performance ---- 47
Designation ---- 48
Performances compact range and ultra compact range ---- 49
Dimensional data ---- 51
Options: Integrated load sensor ---- 58
Options: Integrated water-cooling system ---- 59



Motion controllers for electromechanical cylinders

Main specifications ---- 62
Detailed specifications ---- 63
Compliance with “CE” standards ---- 63
Functions ---- 64
Motion explorer software ---- 65
Accessories ---- 66



Screw Jacks

Experience ---- 69
About the screw jack actuator ---- 69
Performance and dimensional specifications ---- 70
Main benefits ---- 72
Performances ---- 72
Technical requirements for SKF electromechanical cylinders ---- 74

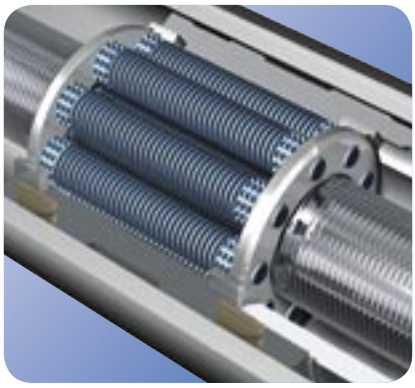

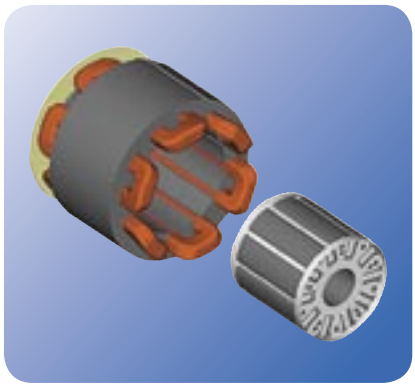

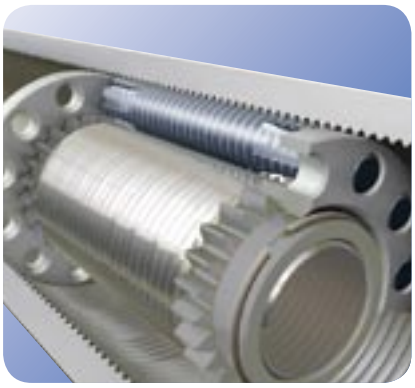

At last, an all electric SKF Plug & Play cylinder performing with the power of hydraulics and the velocity of pneumatics.

SKF cylinders using SKF planetary roller screws are expanding the limits of linear cylinders.

They are designed for long life, high acceleration and high force applications.

The cylinders use brushless servomotor technology, with an in line direct drive as standard.

SKF electromechanical cylinder benefits compared to other technologies

	SKF electric cylinders	Hydraulic cylinders	Pneumatic cylinders
Load capacity	Very high	Very high	High
Lifetime	Very long	Can be long with proper maintenance	Can be long with proper maintenance
Speed	Very high	High	Very high
Acceleration	Very high	Very high	Very high
Stiffness	Very high	High	Very low
Shock resistance	Very high	Very high	High
Efficiency	> 80 %	< 50 %	< 50 %
Maintenance	Very low	Very high	High
Installation	Very easy	Complex	Very complex
Position control	Very easy	Complex	Very complex
Position accuracy	Very high	Average	Low
Environmental concerns	Low	Frequent leaks	High noise level

If hydraulic cylinders remain the only solution for high loads and long strokes, electromechanical cylinders are a cost effective alternative because there is one energy conversion verses two in hydraulic system. Installation time is reduced.

Set up is easy: the motion controller can be connected to all industrial electrical power supplies and customer interfaces make mounting easy.

Roller screw

The thread design of the rollers and nut eliminate rolling element recirculation and permit a planetary motion of the rollers; this unique feature supresses the potential risk of recirculation failure.

The diameters of the 3 basic elements (screw, rollers and nut) are selected in such a manner that the rollers, when they freely roll inside the nut, follow a planetary path and do not move axially. The profile of the screw shaft and the nut thread has a 90 degree angle, for optimised shear resistance.

The profile of the thread flanks on the roller is shaped to give an equivalent large ball diameter with much higher contact points than a conventional ball screw.

The shape and the number of contact points provide a high load carrying capacity. Roller screws have a load carrying capacity about 3 times higher than the average ball screw capacity. Angular acceleration greater than 12 000 rad/s^2 is possible.

Brushless motor

The motor winding is wound into the stator and permanent magnets fixed onto the rotor. No brush means minimum maintenance. Designed for high performance, it provides

- very high acceleration
- high and constant torque over a wide range of speed
- high nominal speed
- precise speed and/or position control.

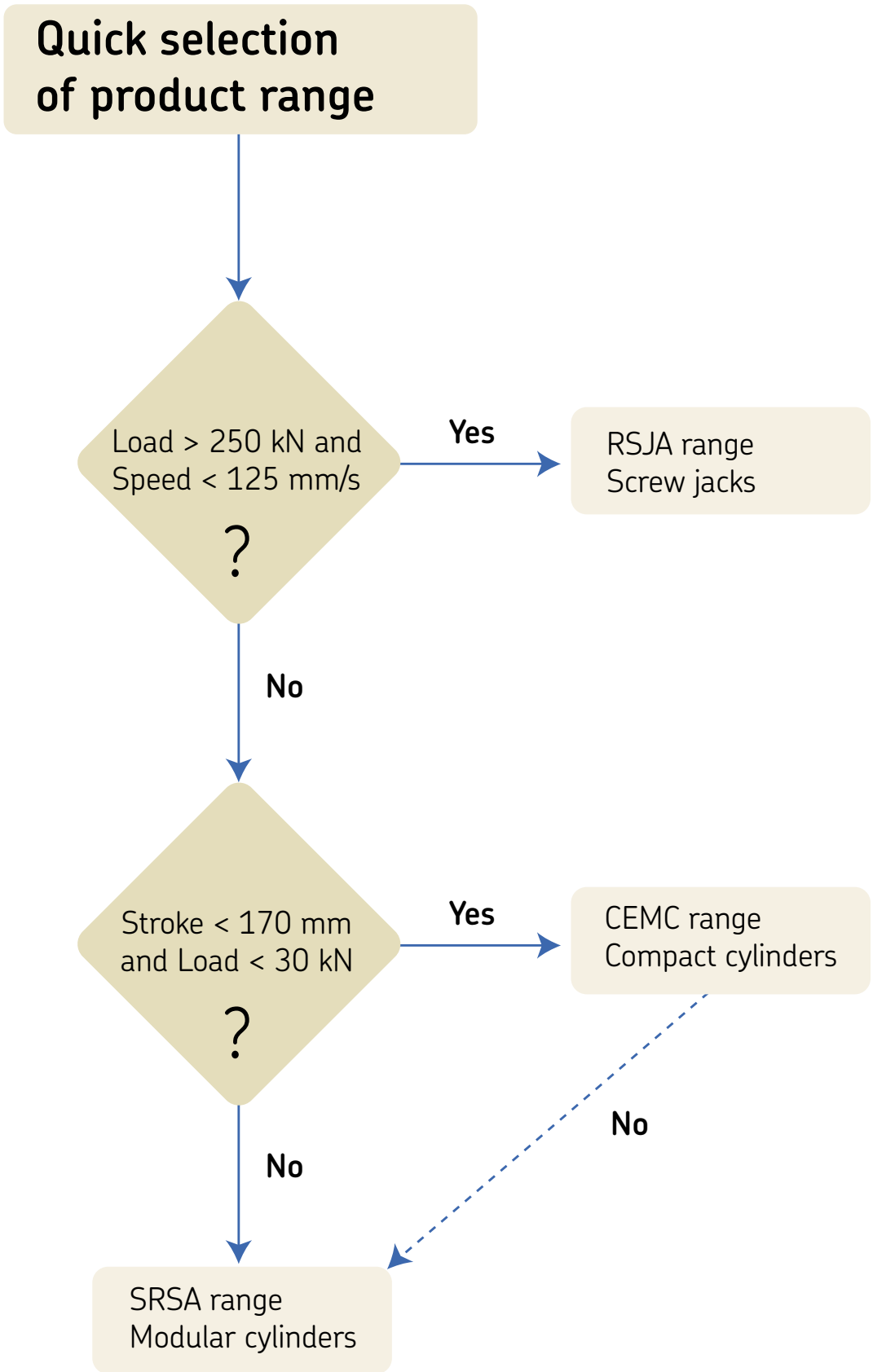
Quick selection of product range
Load > 250 kN and Speed < 125 mm/s
?
Yes
RSJA range
Screw jacks
No
Stroke < 170 mm and Load < 30 kN
?
Yes
CEMC range
Compact cylinders
No
No
SRSA range
Modular cylinders

Three ranges to meet your requirements

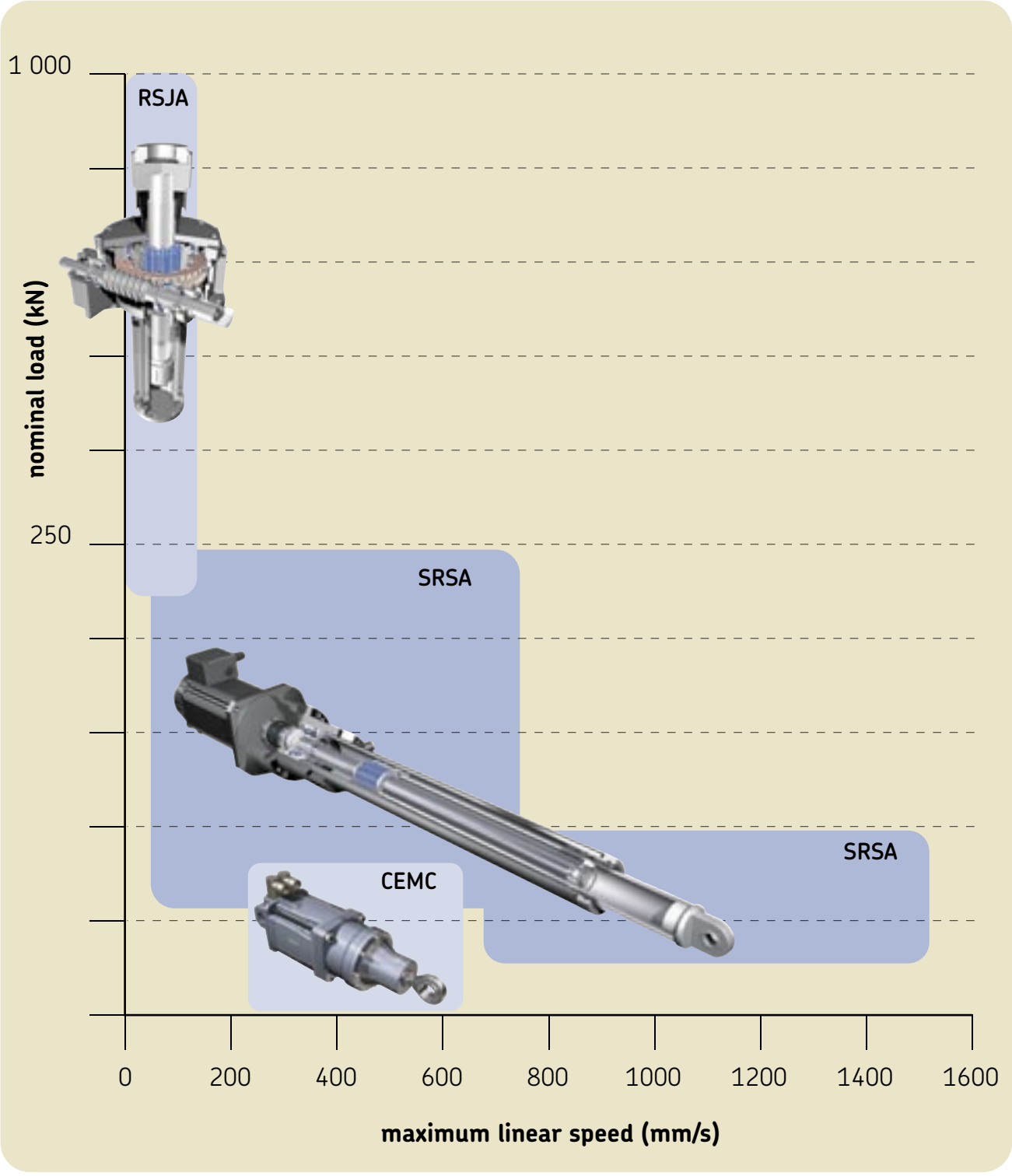

RSJA : jack actuator
SRSA : modular cylinder
CEMC : compact cylinder







Modular cylinders



Description of the mechanism

The high performance electro-mechanical cylinder consists of an SKF planetary roller screw directly driven through a coupling by a brushless motor. The roller screw converts rotary motion into linear movement.

As the screw rotates, the nut extends and retracts the force tube, which is attached to the load.

The screw is held by a combination of SKF angular contact ball bearings which allow for high speed, high rigidity and high durability; for long strokes the free end of the shaft is supported and guided inside the force tube to prevent any vibration.

The force tube and roller screw nut are guided inside the external tube which gives an axially and radially stiff system. The cylinder is sealed between the force tube and external tube. The unit is designed and finished to suit industrial requirements.

The integrated anti-rotation (option) is designed with the profile rail guides. This preloaded design provides a very high torsional stiffness and durability.

Two internal bumpers secure the mechanism during the adjustment phase.

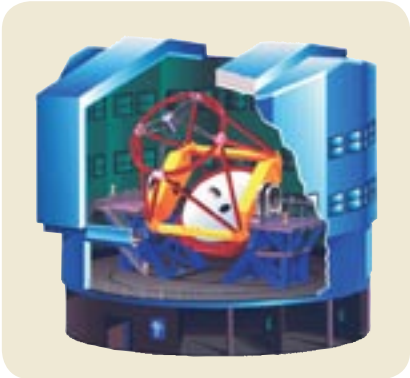

Main benefits

- Easy use and set up
- Long service life is achieved with a simple power train of motor, coupling and roller screw
- Permit faster operation and longer travel under high load
- High acceleration capability
- High durability
- High rigidity
- Less maintenance required due to fewer components
- Programmable controller
- Integrated anti-rotation.



Tailor-made solutions with very flexible choice

From the basic product range consisting of different cylinder types, you can build your own cylinder.

Starting from the mechanical performances (dynamic load capacity, speed), you can choose the motor that will bring the performances suitable for your application (nominal force, linear speed, peak force, etc...) you are not limited to one configuration.

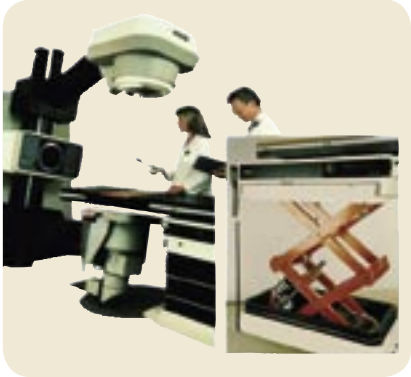

Product range

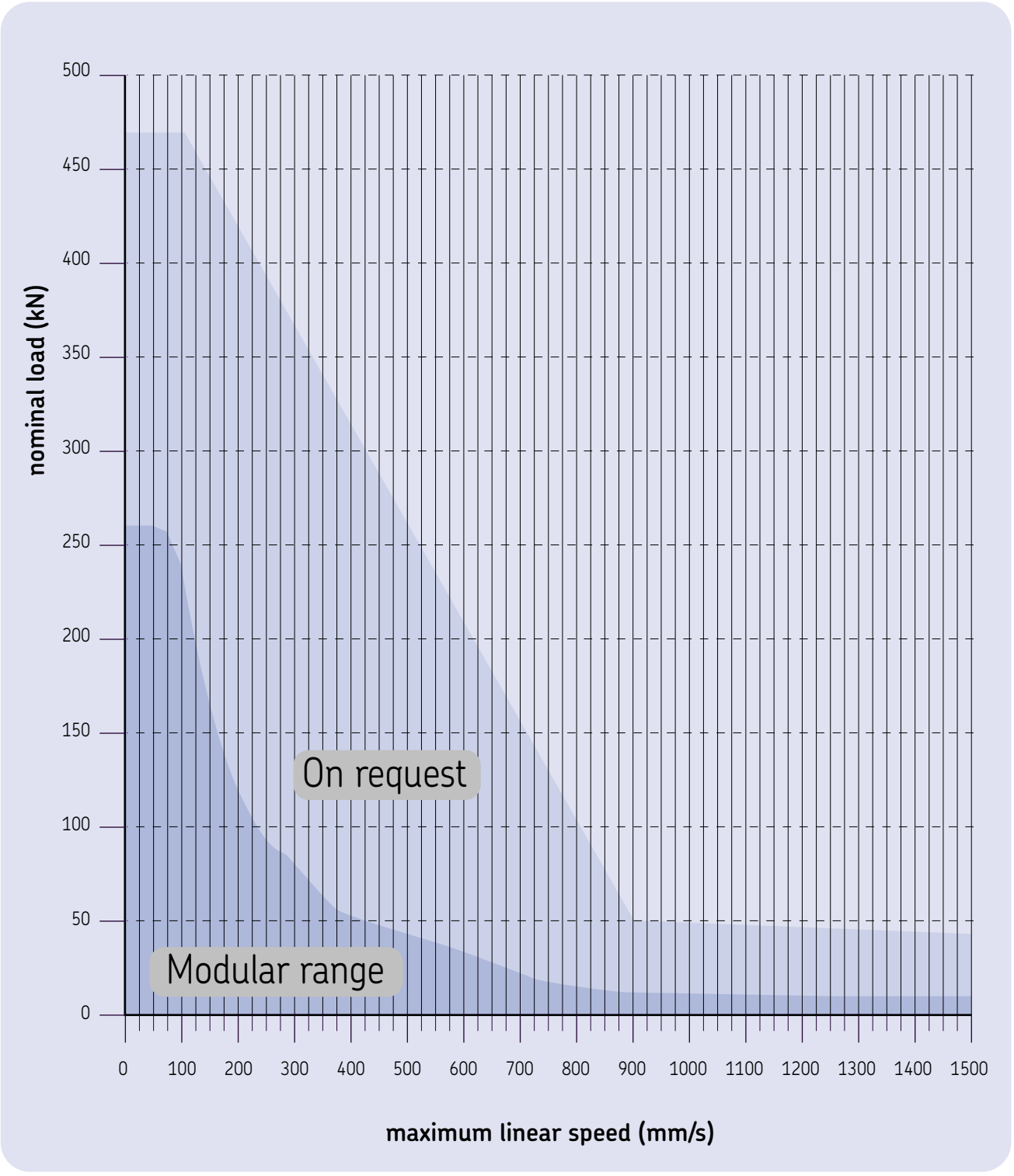

Quick size selection - Life time selection

Method

Calculate F_{mean} (constant mean load)

Calculate lifetime distance

Draw the point (lifetime distance-F_{mean}) on SRSA lifetime selection graph (start with SRSA 25 size)

Is the point under cylinder curve ?

No → Take the next bigger cylinder size

Yes → Make quick motor selection

How to calculate F_{mean} Example

$$F_{mean} = \frac{(F_1^3 L_1 + F_2^3 L_2 + F_3^3 L_3 + ...)^{1/3}}{(L_1 + L_2 + L_3 + ...)^{1/3}}$$

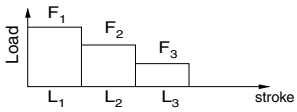

$$F_{mean} = \frac{F_{min} + 2F_{max}}{3}$$

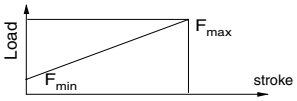

Example: F_{mean} = 25 kN

Example: required lifetime: 5 years, 231 days/year, 24 hours/day
Stroke : 50 mm
Cycle time : 10 sec
Lifetime distance
= 2 × 50 × 5 × 231 × 24 × 3600/10
= 1000 10^6 mm

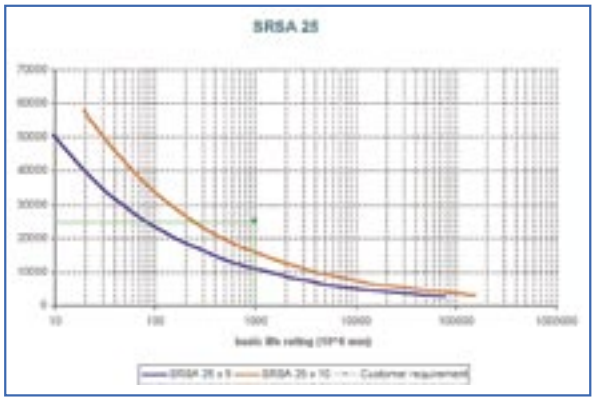

SRSA25 : too small

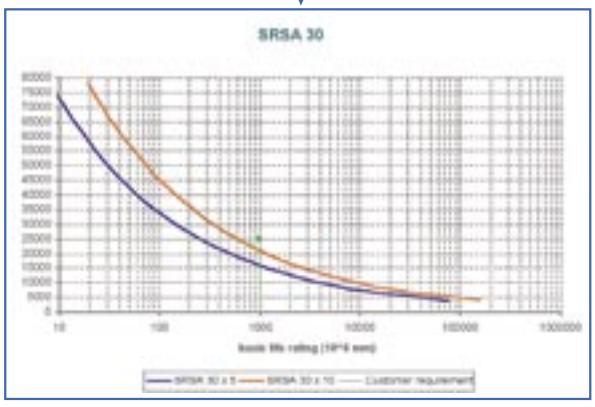

SRSA30 : too small

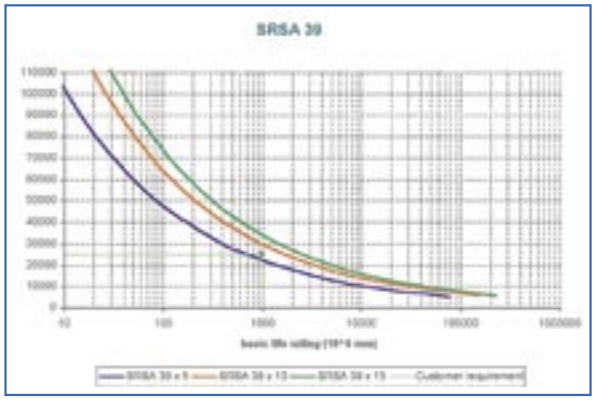

SRSA3910 and SRSA3915 meet the requirements

Motor selection

Method

Calculate $F_{thermal}$

↓

Calculate F_{nom} required (1):
$F_{nom} = F_{thermal} / 0,7$

↓

Calculate required.
maximum speed

↓

With cylinder size defined before, search in performance specification tables for cylinder with the nearest performance (Nominal force and max. speed) (2)

How to calculate $F_{thermal}$ Example

$$F_{thermal} = \frac{\left(T_1 (F_1)^2 + T_2 (F_2)^2 + T_3 (F_3)^2\right)^{1/2}}{(T_1 + T_2 + T_3)^{1/2}}$$

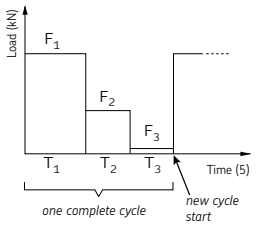

Example: $F_{thermal}$ = 14 kN

Example: F_{nom} required = 14 / 0,7 = 20 kN

Example: max. speed = 200 mm/s

Example: Size selected was SRSA39 with lead 10 or 15 mm.
Required maximum speed is 200 mm/s
and required nominal force is 20kN.
In the table below, we see that SRSA3910-...-X82R3B fits:

↓

Performance specifications

Designation	Screw lead	Nominal force	Peak force	Linear speed	Standard stroke	Over-stroke	Dynamic load	Nominal power	Controller size
	mm	kN	kN	mm/s	mm	mm	kN	kW	-
SRSA3905-•••-X82RB	5	13,3	25,9	279,2**	0 ... 800	5	129,2	5,3	16
SRSA3905-•••-X84QB	5	23,3	49,8	175,0	0 ... 800	5	129,2	5,1	16
SRSA3905-•••-X82R3B	5	38,0	73,9	108,3	0 ... 800	5	129,2	5,3	16
SRSA3905-•••-X82R5B	5	63,3	123,1*	65,0	0 ... 800	5		5,3	16
SRSA3910-•••-X84QB	10	12,8	27,4	350,0	0 ... 800	5	138,5	5,1	16
SRSA3910-•••-X82R3B	10	20,9	40,6	216,7	0 ... 800	5	138,5	5,3	16
SRSA3910-•••-X84Q3B	10	36,6	78,0	116,7	0 ... 800	5	138,5	5,1	16
SRSA3910-•••-X84Q5B	10	61,0	130,1*	70,0	0 ... 800	5	138,5	5,1	16
SRSA3915-•••-X86JB	15	13,0	29,8	650,0	0 ... 800	5	138,5	7,5	32
SRSA3915-•••-X84K3B	15	25,2	58,7	291,7	0 ... 800	5	138,5	6,8	32
SRSA3915-•••-X86J3B	15	36,9	85,0	216,7	0 ... 800	5	138,5	7,5	32
SRSA3915-•••-X86J5B	15	61,5	141,7*	130,0	0 ... 800	5	138,5	7,5	32

(1) This calculation is approximate, just to help for quick selection.
An exact calculation should integrate acceleration/deceleration loads, mean speed...
To get an optimized cylinder definition, please contact SKF.
(2) If you don't find any cylinder that meets your requirement, please contact SKF.

Life time selection

SRSA 25

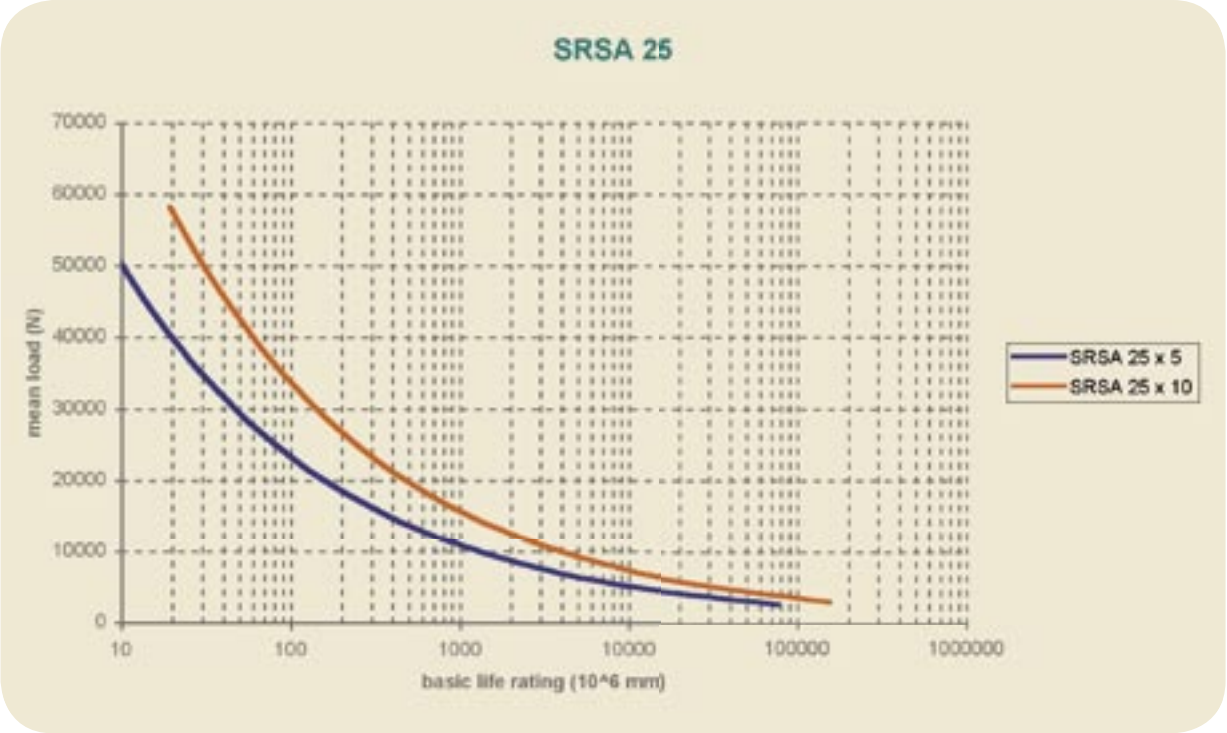

SRSA 30

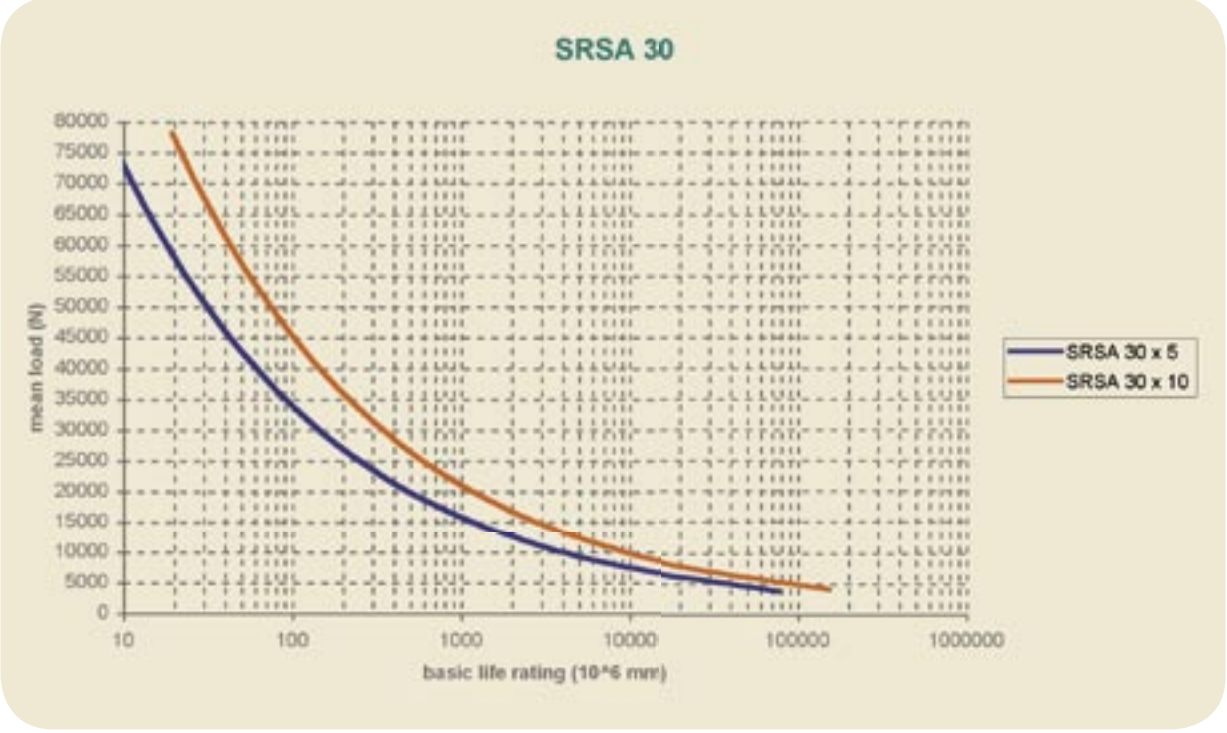

SRSA 39

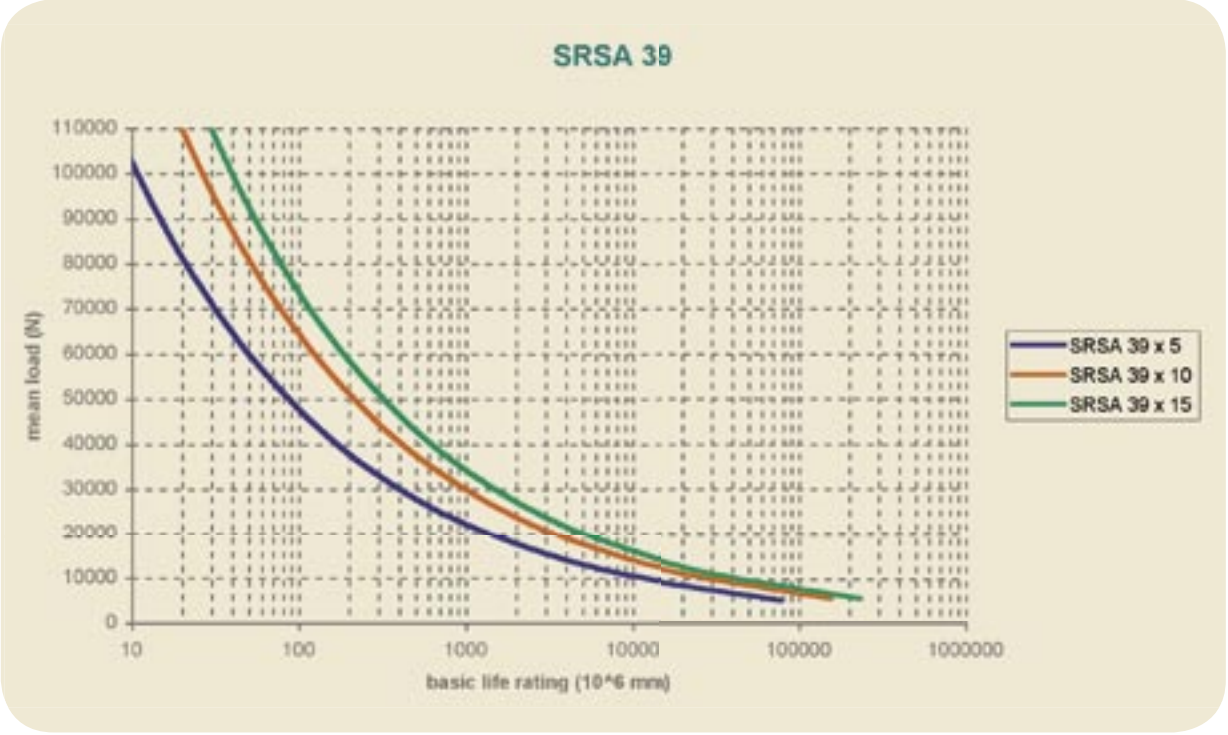

SRSA 48

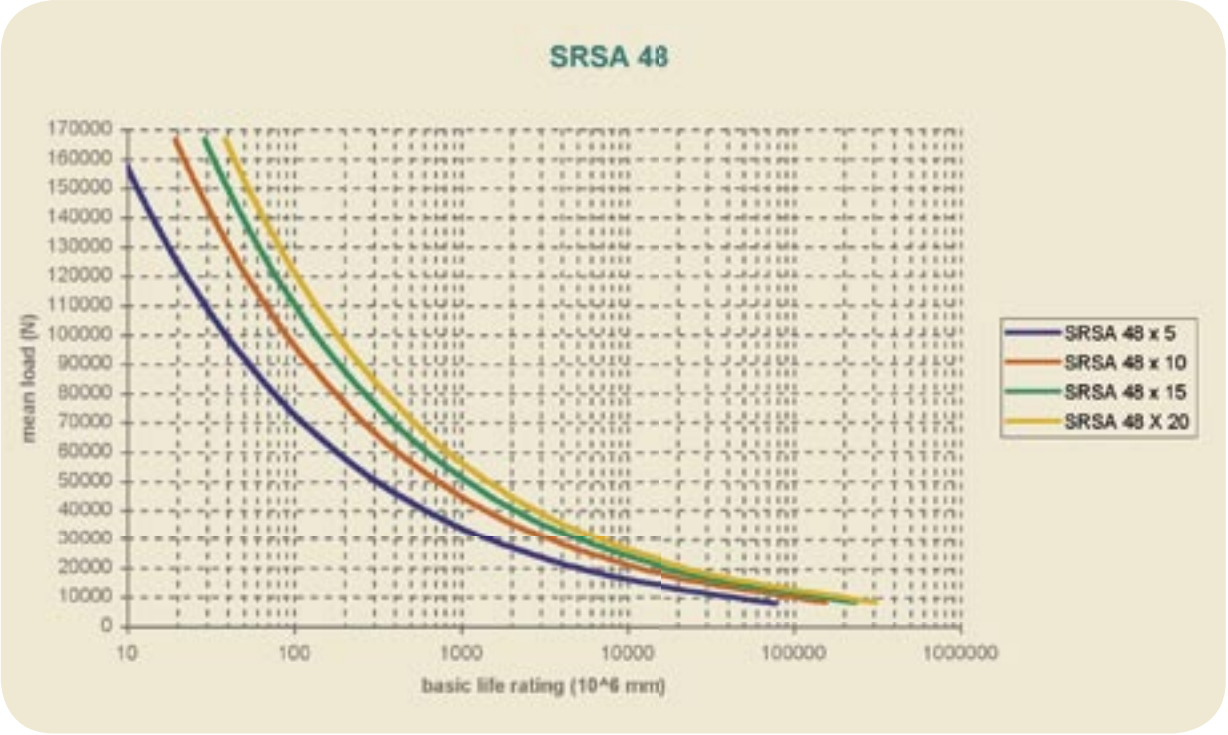

SRSA 60

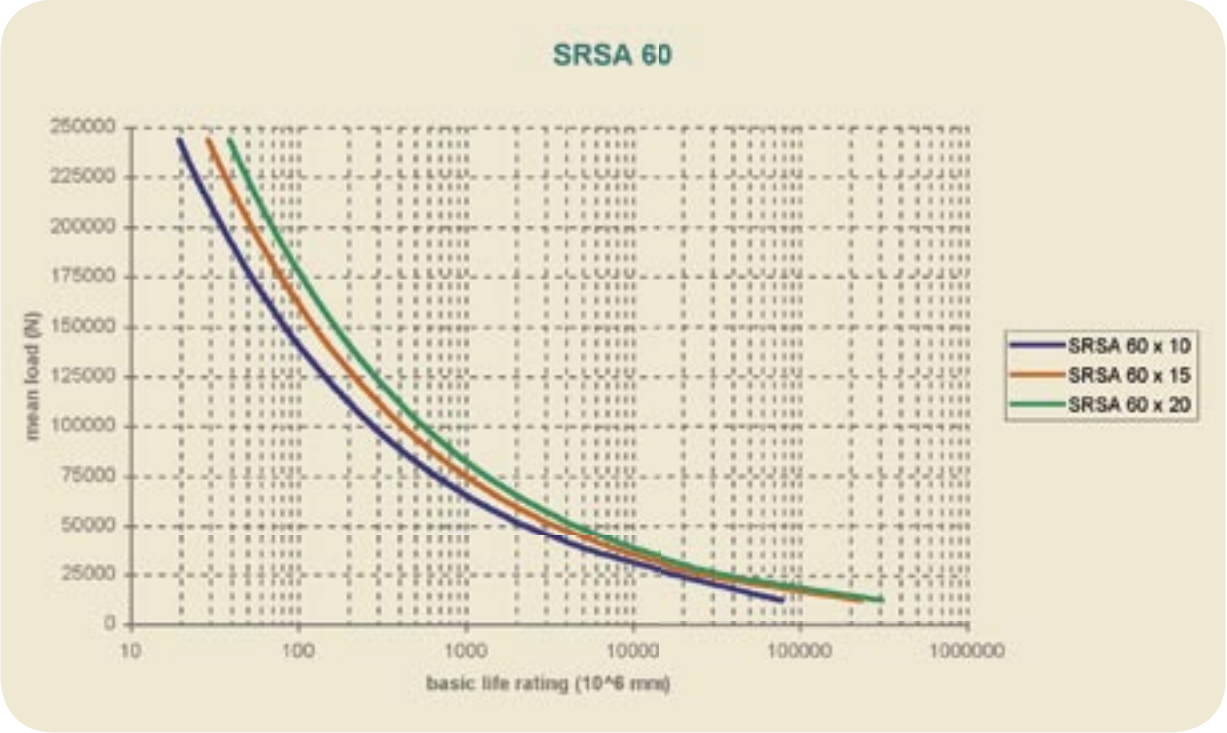

SRSA 75



Designation

SRSA	48	15	-	0400	-	S	L	0	-	T1

Cylinder type

SRSA = Planetary Roller Screw
SVSA = Recirculating Roller Screw
SLSA = Long Lead Ball Screw

Screw Diameter mm

25 = Diameter 25
30 = Diameter 30
39 = Diameter 39
... = Diameter ...

Screw Lead mm

05 = Lead 5
10 = Lead 10
15 = Lead 15
xx = Lead xx

Stroke mm

0050 = Stroke 50
0150 = Stroke 150
1100 = Stroke 1100
xxxx = Stroke xxxx

Cylinder design (Frame)

S = Standard Design
Z = Custom Design

Cylinder design (Motor assembly)

L = Design with in line motor
P = Design with parallel motor

Cylinder design (Function)

0 = Without Anti-Rotation on the force tube
1 = With Anti-Rotation on the force tube

Fixe Attachment (Linked to the frame)

T1 = Trunnion (standard), same dynamic capacity as the front attachment - see page 44
T2 = High capacity trunnion
Z = Custom attachment

Designation

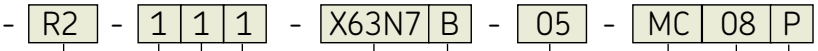

Mobile Attachment (Linked to the force tube)

R2 = Rod end with 2 Degres Of Freedom
R3 = Rod end with 3 Degres Of Freedom
Z = Custom attachment
N = Without attachment

Limit Switches - Home sensor

0 = No limit switch in retracted position
1 = Limit switch in retracted position

0 = No limit switch in extended position
1 = Limit switch in extended position

0 = No home sensor for home position
1 = Home sensor for home position

Motor

Motor designation

Fail safe brake

Cable length (Motor power, Resolver and Limit switches)

05 = 5 metres (standard)
10 = 10 metres
15 = 15 metres
20 = 20 metres

Servoamplifier type

MC = Motion Controller
SC = Speed Controller

Nominal current of servoamplifier (A)

08 = Nominal current 8 A
16 = Nominal current 16 A
xx = Nominal current xx A

Fieldbus interface

C = CanOpen
P = Profibus

Performance specifications

Designation	Screw lead	Nominal force (1)	Peak force (2)	Linear speed	Standard stroke (3)	Over-stroke (4)	Dynamic load	Nominal power	Controller size (5)
	mm	kN	kN	mm/s	mm	mm	kN	kW	-
SRSA2505-•••-X43LB	5	4,9	13,5	333,0	0 ... 400	5	63,3	1,8	08
SRSA2505-•••-X63RB	5	10,7	21,5	225,0	0 ... 400	5	63,3	2,8	08
SRSA2505-•••-X43L5B	5	23,3	64,0*	66,7	0 ... 400	5	63,3	1,8	08
SRSA2505-•••-X63R4B	5	40,7	81,7*	56,3	0 ... 400	5	63,3	2,8	08
SRSA2510-•••-X63RB	10	5,6	11,3	450,0	0 ... 400	5	72,6	2,8	08
SRSA2510-•••-X62R3B	10	10,7	22,7	216,7	0 ... 400	5	72,6	2,5	08
SRSA2510-•••-X63R4B	10	21,4	43,0	112,5	0 ... 400	5	72,6	2,8	08
SRSA2510-•••-X63N7B	10	37,5	90,5*	95,2	0 ... 400	5	72,6	3,2	16

Dimensional specifications

Designation	A	B	C	Ø d	Ø D	L	M	Ø t	Ø T	Weight (6) W_o	W_x
	mm	mm	mm	mm	mm	mm	mm	mm	mm	Kg	Kg/50mm
SRSA2505-•••-SL/P0-T1-••-X43LB	91,5	111,5	107	-	-	251	M42x1,5 x depth 22	25	36	20,3	1,1
SRSA2505-•••-SL/P1-T1-••-X43LB				61	96		M35x1,5 x depth 22			23,0	1,3
SRSA2505-•••-SL/P0-T1-••-X63RB	121,0	141,0	117	-	-	265	M42x1,5 x depth 22	25	36	24,9	1,1
SRSA2505-•••-SL/P1-T1-••-X63RB				61	96		M35x1,5 x depth 22			27,6	1,3
SRSA2505-•••-SL/P0-T2-••-X43L5B	98,0	118,0	125	-	-	364	M42x1,5 x depth 22	35	45	24,7	1,1
SRSA2505-•••-SL/P1-T2-••-X43L5B				61	96		M35x1,5 x depth 22			27,3	1,3
SRSA2505-•••-SL/P0-T2-••-X63R4B	121,0	141,0	125	-	-	387	M42x1,5 x depth 22	35	45	29,3	1,1
SRSA2505-•••-SL/P1-T2-••-X63R4B				61	96		M35x1,5 x depth 22			31,9	1,3
SRSA2510-•••-SL/P0-T1-••-X63RB	121,0	141,0	117	-	-	265	M42x1,5 x depth 22	25	36	24,9	1,1
SRSA2510-•••-SL/P1-T1-••-X63RB				61	96		M35x1,5 x depth 22			27,6	1,3
SRSA2510-•••-SL/P0-T1-••-X62R3B	121,0	141,0	125	-	-	358	M42x1,5 x depth 22	25	36	27,3	1,1
SRSA2510-•••-SL/P1-T1-••-X62R3B				61	96		M35x1,5 x depth 22			29,9	1,3
SRSA2510-•••-SL/P0-T2-••-X63R4B	121,0	141,0	125	-	-	387	M42x1,5 x depth 22	35	45	29,3	1,1
SRSA2510-•••-SL/P1-T2-••-X63R4B				61	96		M35x1,5 x depth 22			31,9	1,3
SRSA2510-•••-SL/P0-T2-••-X63N7B	121,0	141,0	161	-	-	388	M42x1,5 x depth 22	35	45	32,8	1,1
SRSA2510-•••-SL/P1-T2-••-X63N7B				61	96		M35x1,5 x depth 22			35,4	1,3

(1) Nominal Force: Can be used 100% of time at low speed (10% of maximum speed).
(2) Peak Force: Max Force under short time (1 s max) at low speed with selected drive.
(3) Backlash elimination up to 300 mm stroke. Over 300mm, axial play = 20 µm. Standard stroke in 50 mm step. For other stroke, please contact SKF.
(4) Integrated at each end.
(5) See § 4: Motion controllers for Electromechanical cylinders.
(6) Total weight = W_o + (stroke/50) x W_x

* Value to be limited at 80% of Dynamic Load (dynamic phases). Can be used during static phases. Please contact SKF.

SRSA 25••-••••-SL•

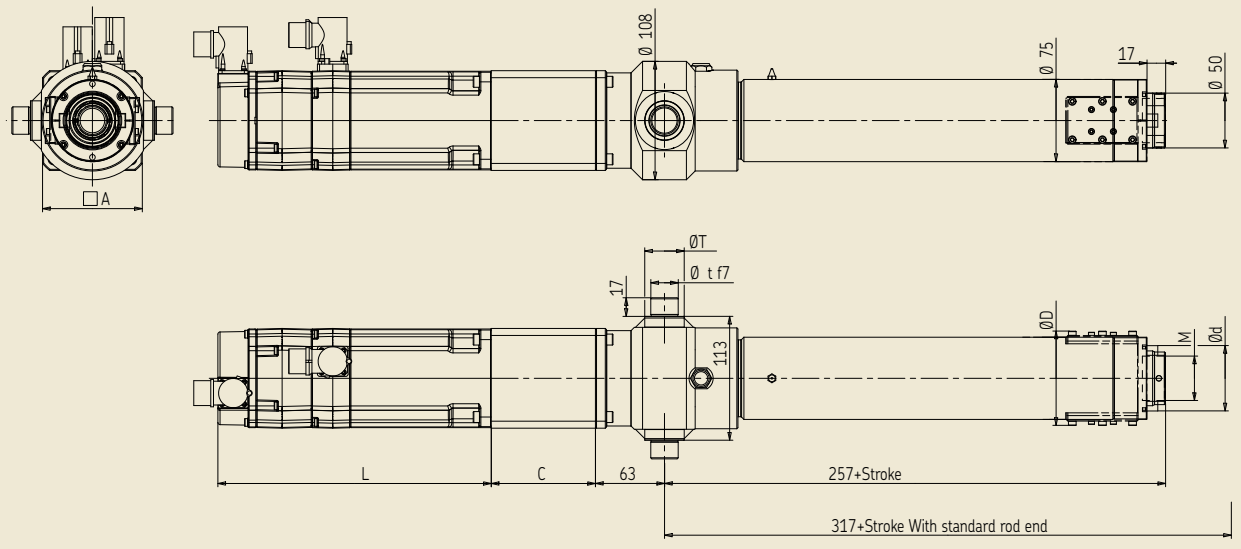

SRSA 25••-••••-SP•

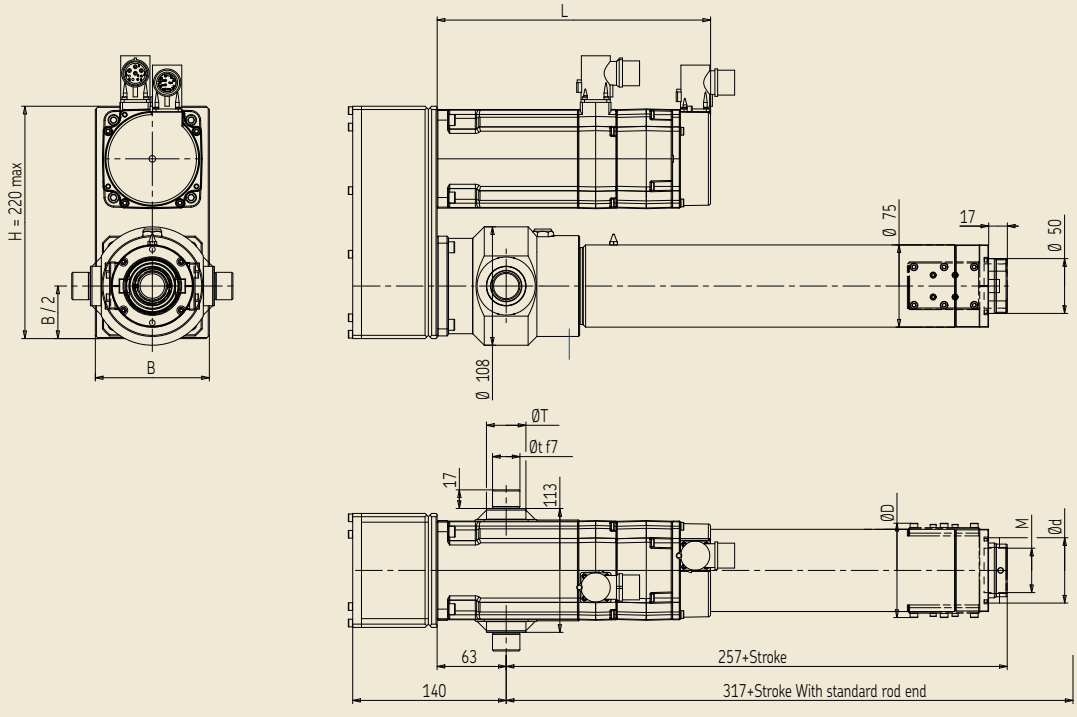

Performance specifications

Designation	Screw lead	Nominal force (1)	Peak force (2)	Linear speed	Standard stroke (3)	Over-stroke (4)	Dynamic load	Nominal power	Controller size (5)
	mm	kN	kN	mm/s	mm	mm	kN	kW	-
SRSA3005-•••-X62RB	5	7,0	14,8	325,0	0 ... 500	5	92,0	2,5	08
SRSA3005-•••-X82RB	5	13,9	27,0	325,0	0 ... 500	5	92,0	5,3	16
SRSA3005-•••-X63N3B	5	29,7	71,9	111,1	0 ... 500	5	92,0	3,2	16
SRSA3005-•••-X82R4B	5	52,9	102,8*	81,3	0 ... 500	5	92,0	5,3	16
SRSA3010-•••-X82RB	10	7,5	14,6	650,0	0 ... 500	5	97,6	5,3	16
SRSA3010-•••-X84QB	10	13,1	28,0	350,0	0 ... 500	5	97,6	5,1	16
SRSA3010-•••-X82R4B	10	28,5	55,5	162,5	0 ... 500	5	97,6	5,3	16
SRSA3010-•••-X82R7B	10	49,9	97,1*	92,9	0 ... 500	5	97,6	5,3	16

Dimensional specifications

Designation	A	B	C	Ø d	Ø D	L	M	Ø t	Ø T	Weight (6) W_o	W_x
	mm	mm	mm	mm	mm	mm	mm	mm	mm	Kg	Kg/50mm
SRSA3005-•••-SL/P0-T1-••-X62RB	121	141	119	-	-	236	M48x2 x depth 30	30	40	29,5	1,4
SRSA3005-•••-SL/P1-T1-••-X62RB				71	105		M44x2 x depth 30			29,3	1,5
SRSA3005-•••-SL/P0-T1-••-X82RB	158	178	129	-	-	266	M48x2 x depth 30	30	40	38,4	1,4
SRSA3005-•••-SL/P1-T1-••-X82RB				71	105		M44x2 x depth 30			38,2	1,5
SRSA3005-•••-SL/P0-T2-••-X63N3B	121	141	127	-	-	387	M48x2 x depth 30	40	50	35,9	1,4
SRSA3005-•••-SL/P1-T2-••-X63N3B				71	105		M44x2 x depth 30			35,7	1,5
SRSA3005-•••-SL/P0-T2-••-X82R4B	158	178	163	-	-	397	M48x2 x depth 30	40	50	45,9	1,4
SRSA3005-•••-SL/P1-T2-••-X82R4B				71	105		M44x2 x depth 30			45,7	1,5
SRSA3010-•••-SL/P0-T1-••-X82RB	158	178	129	-	-	266	M48x2 x depth 30	30	40	38,4	1,4
SRSA3010-•••-SL/P1-T1-••-X82RB				71	105		M44x2 x depth 30			38,2	1,5
SRSA3010-•••-SL/P0-T1-••-X84QB	158	178	129	-	-	326	M48x2 x depth 30	30	40	45,4	1,4
SRSA3010-•••-SL/P1-T1-••-X84QB				71	105		M44x2 x depth 30			45,2	1,5
SRSA3010-•••-SL/P0-T2-••-X82R4B	158	178	163	-	-	397	M48x2 x depth 30	40	50	45,9	1,4
SRSA3010-•••-SL/P1-T2-••-X82R4B				71	105		M44x2 x depth 30			45,7	1,5
SRSA3010-•••-SL/P0-T2-••-X82R7B	158	178	163	-	-	397	M48x2 x depth 30	40	50	45,9	1,4
SRSA3010-•••-SL/P1-T2-••-X82R7B				71	105		M44x2 x depth 30			45,7	1,5

(1) Nominal Force: Can be used 100% of time at low speed (10% of maximum speed).
(2) Peak Force: Max Force under short time (1 s max) at low speed with selected drive.
(3) Backlash elimination up to 400 mm stroke, over 20 µ. Standard stroke in 50 mm step. For other stroke, please contact SKF.
(4) Integrated at each end.
(5) See § 4: Motion controllers for Electromechanical cylinders.
(6) Total weight = W_o + (stroke/50) x W_x

* Value to be limited at 80% of Dynamic Load (dynamic phases). Can be used during static phases. Please contact SKF.

SRSA 30••-••••-SL•

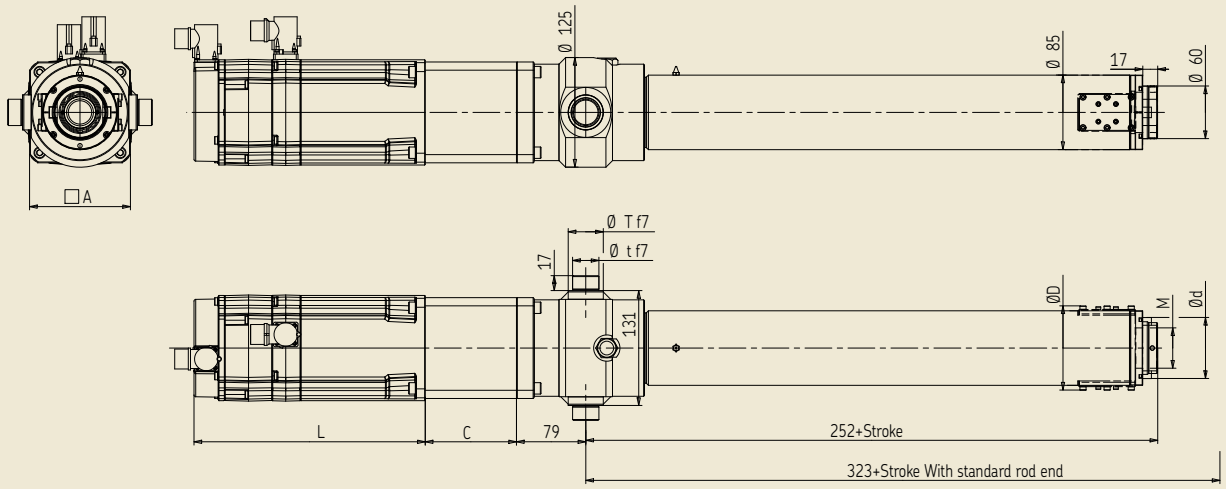

SRSA 30••-••••-SP•

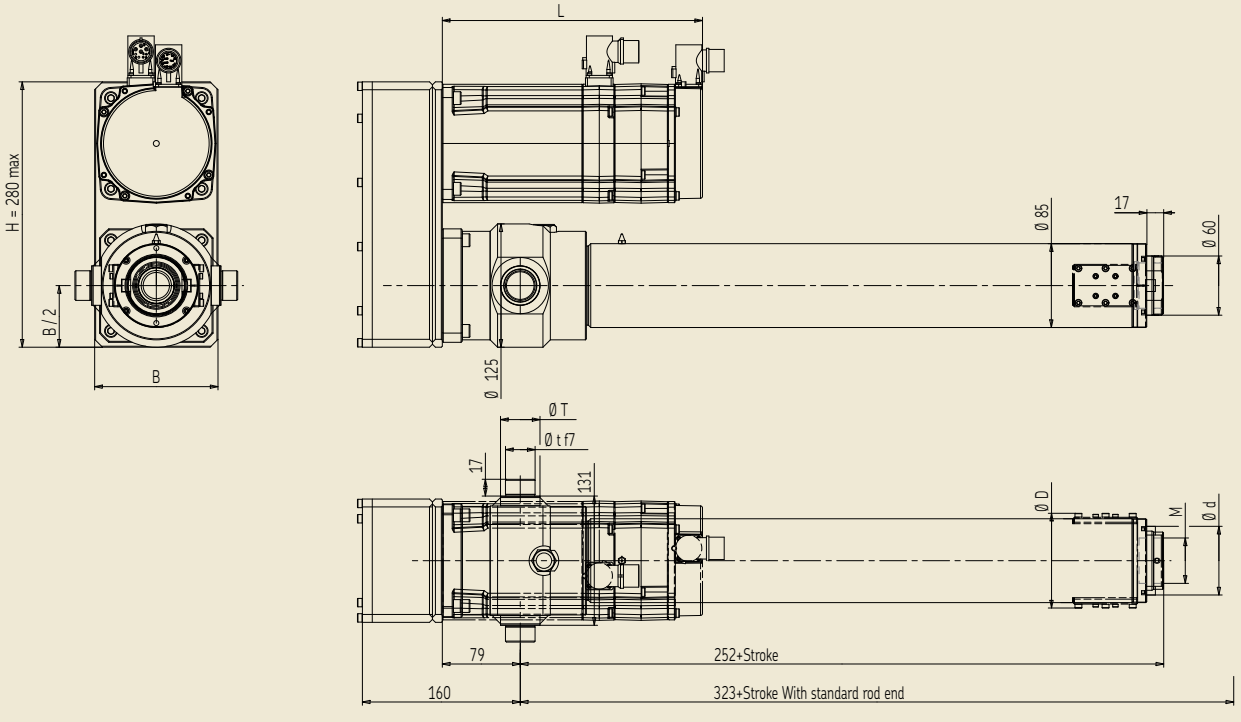

Performance specifications

Designation	Screw lead	Nominal force (1)	Peak force (2)	Linear speed	Standard stroke (3)	Over-stroke (4)	Dynamic load	Nominal power	Controller size (5)
	mm	kN	kN	mm/s	mm	mm	kN	kW	-
SRSA3905-•••-X82RB	5	13,3	25,9	279,2**	0 ... 800	5	129,2	5,3	16
SRSA3905-•••-X84QB	5	23,3	49,8	175,0	0 ... 800	5	129,2	5,1	16
SRSA3905-•••-X82R3B	5	38,0	73,9	108,3	0 ... 800	5	129,2	5,3	16
SRSA3905-•••-X82R5B	5	63,3	123,1*	65,0	0 ... 800	5	129,2	5,3	16
SRSA3910-•••-X84QB	10	12,8	27,4	350,0	0 ... 800	5	138,5	5,1	16
SRSA3910-•••-X82R3B	10	20,9	40,6	216,7	0 ... 800	5	138,5	5,3	16
SRSA3910-•••-X84Q3B	10	36,6	78,0	116,7	0 ... 800	5	138,5	5,1	16
SRSA3910-•••-X84Q5B	10	61,0	130,1*	70,0	0 ... 800	5	138,5	5,1	16
SRSA3915-•••-X86JB	15	13,0	29,8	650,0	0 ... 800	5	138,5	7,5	32
SRSA3915-•••-X84K3B	15	25,2	58,7	291,7	0 ... 800	5	138,5	6,8	32
SRSA3915-•••-X86J3B	15	36,9	85,0	216,7	0 ... 800	5	138,5	7,5	32
SRSA3915-•••-X86J5B	15	61,5	141,7*	130,0	0 ... 800	5	138,5	7,5	32

Dimensional specifications

Designation	A	B	C	Ø d	Ø D	L	M	Ø t	Ø T	Weight (6) W_o	W_x
	mm	mm	mm	mm	mm	mm	mm	mm	mm	Kg	Kg/100mm
SRSA3905-•••-SL/P0-T1-•-X82RB	185	205	152	-	-	266	M62x2 x depth 40	40	48	56,2	4,3
SRSA3905-•••-SL/P1-T1-•-X82RB				86	126		M56x2 x depth 40			55,9	4,8
SRSA3905-•••-SL/P0-T1-•-X84QB	185	205	152	-	-	326	M62x2 x depth 40	40	48	63,2	4,3
SRSA3905-•••-SL/P1-T1-•-X84QB				86	126		M56x2 x depth 40			62,9	4,8
SRSA3905-•••-SL/P0-T2-•-X82R3B	185	205	182	-	-	397	M62x2 x depth 40	50	59	62,7	4,3
SRSA3905-•••-SL/P1-T2-•-X82R3B				86	126		M56x2 x depth 40			62,4	4,8
SRSA3905-•••-SL/P0-T2-•-X82R5B	185	205	186	-	-	397	M62x2 x depth 40	50	59	63,7	4,3
SRSA3905-•••-SL/P1-T2-•-X82R5B				86	126		M56x2 x depth 40			63,4	4,8
SRSA3910-•••-SL/P0-T1-•-X84QB	185	205	152	-	-	326	M62x2 x depth 40	40	48	63,2	4,3
SRSA3910-•••-SL/P1-T1-•-X84QB				86	126		M56x2 x depth 40			62,9	4,8
SRSA3910-•••-SL/P0-T2-•-X82R3B	185	205	182	-	-	397	M62x2 x depth 40	50	59	62,7	4,3
SRSA3910-•••-SL/P1-T2-•-X82R3B				86	126		M56x2 x depth 40			62,4	4,8
SRSA3910-•••-SL/P0-T2-•-X84Q3B	185	205	186	-	-	457	M62x2 x depth 40	50	59	70,7	4,3
SRSA3910-•••-SL/P1-T2-•-X84Q3B				86	126		M56x2 x depth 40			70,4	4,8
SRSA3910-•••-SL/P0-T2-•-X84Q5B	185	205	212	-	-	476	M62x2 x depth 40	50	59	78,9	4,3
SRSA3910-•••-SL/P1-T2-•-X84Q5B				86	126		M56x2 x depth 40			78,6	4,8
SRSA3915-•••-SL/P0-T1-•-X86JB	185	205	156	-	-	386	M62x2 x depth 40	40	48	71,2	4,3
SRSA3915-•••-SL/P1-T1-•-X86JB				86	126		M56x2 x depth 40			70,9	4,8
SRSA3915-•••-SL/P0-T2-•-X84K3B	185	205	186	-	-	457	M62x2 x depth 40	50	59	70,7	4,3
SRSA3915-•••-SL/P1-T2-•-X84K3B				86	126		M56x2 x depth 40			70,4	4,8
SRSA3915-•••-SL/P0-T2-•-X86J3B	185	205	212	-	-	536	M62x2 x depth 40	50	59	85,9	4,3
SRSA3915-•••-SL/P1-T2-•-X86J3B				86	126		M56x2 x depth 40			85,6	4,8
SRSA3915-•••-SL/P0-T2-•-X86J5B	185	205	216	-	-	536	M62x2 x depth 40	50	59	90,7	4,3
SRSA3915-•••-SL/P1-T2-•-X86J5B				86	126		M56x2 x depth 40			90,4	4,8

(1) Nominal Force: Can be used 100% of time at low speed (10% of maximum speed).
(2) Peak Force: Max Force under short time (1 s max) at low speed with selected drive.
(3) Backlash elimination up to 500 mm stroke, over 20 µ. Standard stroke in 100 mm step. For other stroke, please contact SKF.
(4) Integrated at each end.
(5) See § 4: Motion controllers for Electromechanical cylinders.
(6) Total weight = W_o + (stroke/100) x W_x
* Value to be limited at 80% of Dynamic Load (dynamic phases). Can be used during static phases. Please contact SKF.
** Value must be limited inside the Motion controller. Please contact SKF.

SRSA 39••-••••-SL•

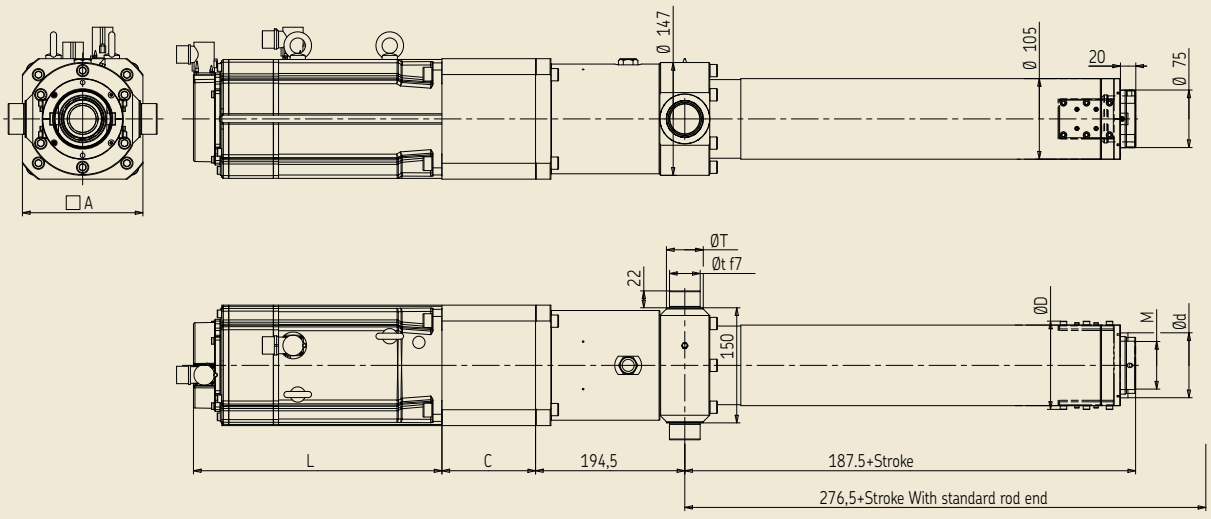

SRSA 39••-••••-SP•

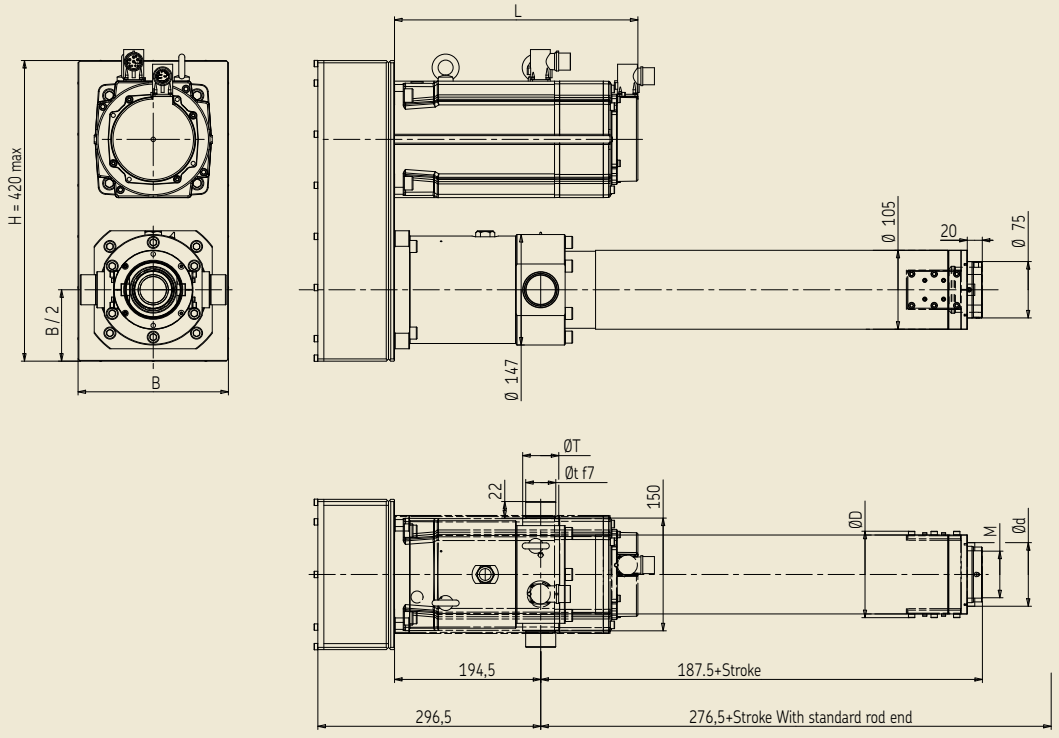

Performance specifications

Designation	Screw lead	Nominal force (1)	Peak force (2)	Linear speed	Standard stroke (3)	Over-stroke (4)	Dynamic load	Nominal power	Controller size (5)
	mm	kN	kN	mm/s	mm	mm	kN	kW	-
SRSA4805-•••-X84KB	5	22,4	52,2	220,8**	0 ... 1000	5	198,1	6,8	32
SRSA4805-•••-D94KB	5	44,8	88,1	175,0	0 ... 1000	5	198,1	9,8	32
SRSA4805-•••-X84K3B	5	63,9	148,8	97,2	0 ... 1000	5	198,1	6,8	32
SRSA4805-•••-X84K5B	5	106,5	248,0*	58,3	0 ... 1000	5	198,1	6,8	32
SRSA4810-•••-D94KB	10	25,1	49,3	350,0	0 ... 1000	5	207,9	9,8	32
SRSA4810-•••-X84K4B	10	47,7	111,0	145,8	0 ... 1000	5	207,9	6,8	32
SRSA4810-•••-X86J4B	10	69,8	160,7	108,3	0 ... 1000	5	207,9	7,5	32
SRSA4810-•••-D94K4B	10	95,3	187,2*	87,5	0 ... 1000	5	207,9	9,8	32
SRSA4815-•••-D95KB	15	21,8	42,6	412,5	0 ... 1000	5	207,9	10,7	32
SRSA4815-•••-X84K5B	15	41,4	96,3	175,0	0 ... 1000	5	207,9	6,8	32
SRSA4815-•••-D94K4B	15	66,2	130,0	131,3	0 ... 1000	5	207,9	9,8	32
SRSA4815-•••-D95K5B	15	103,4	202,4*	82,5	0 ... 1000	5	207,9	10,7	32
SRSA4820-•••-D95KB	20	16,2	31,8	550,0	0 ... 1000	5	207,9	10,7	32
SRSA4820-•••-D94K3B	20	37,0	72,7	233,3	0 ... 1000	5	207,9	9,8	32
SRSA4820-•••-D94K5B	20	61,7	121,1	140,0	0 ... 1000	5	207,9	9,8	32
SRSA4820-•••-D94K7B	20	86,3	169,6*	100,0	0 ... 1000	5	207,9	9,8	32

Dimensional specifications

Designation	A	B	C	Ø d	Ø D	L	M	Ø t	Ø T	Weight (6) W_o	W_x
	mm	mm	mm	mm	mm	mm	mm	mm	mm	Kg	Kg/100mm
SRSA4805-•••-SL/P0-T1-•-X84KB	192	212	174	- 106	- 154	326	M82x2 x depth 40	50	58	84,7	5,7
SRSA4805-•••-SL/P1-T1-•-X84KB							M58x2 x depth 40			88,2	6,4
SRSA4805-•••-SL/P0-T1-•-D94KB	192	212	174	- 106	- 154	410	M82x2 x depth 40	50	58	109,1	5,7
SRSA4805-•••-SL/P1-T1-•-D94KB							M58x2 x depth 40			112,6	6,4
SRSA4805-•••-SL/P0-T2-•-X84K3B	192	212	204	- 106	- 154	457	M82x2 x depth 40	60	70	81,2	5,7
SRSA4805-•••-SL/P1-T2-•-X84K3B							M58x2 x depth 40			84,7	6,4
SRSA4805-•••-SL/P0-T2-•-X84K5B	192	212	230	- 106	- 154	476	M82x2 x depth 40	60	70	99,4	5,7
SRSA4805-•••-SL/P1-T2-•-X84K5B							M58x2 x depth 40			103,0	6,4
SRSA4810-•••-SL/P0-T1-•-D94KB	192	212	174	- 106	- 154	410	M82x2 x depth 40	50	58	109,1	5,7
SRSA4810-•••-SL/P1-T1-•-D94KB							M58x2 x depth 40			112,6	6,4
SRSA4810-•••-SL/P0-T2-•-X84K4B	192	212	228	- 106	- 154	476	M82x2 x depth 40	60	70	96,7	5,7
SRSA4810-•••-SL/P1-T2-•-X84K4B							M58x2 x depth 40			100,2	6,4
SRSA4810-•••-SL/P0-T2-•-X86J4B	192	212	230	- 106	- 154	536	M82x2 x depth 40	60	70	106,4	5,7
SRSA4810-•••-SL/P1-T2-•-X86J4B							M58x2 x depth 40			110,0	6,4
SRSA4810-•••-SL/P0-T2-•-D94K4B	192	212	234	- 106	- 154	580	M82x2 x depth 40	60	70	128,6	5,7
SRSA4810-•••-SL/P1-T2-•-D94K4B							M58x2 x depth 40			132,1	6,4
SRSA4815-•••-SL/P0-T1-•-D95KB	192	212	174	- 106	- 154	472	M82x2 x depth 40	50	58	114,4	5,7
SRSA4815-•••-SL/P1-T1-•-D95KB							M58x2 x depth 40			117,9	6,4
SRSA4815-•••-SL/P0-T2-•-X84K5B	192	212	230	- 106	- 154	476	M82x2 x depth 40	60	70	99,4	5,7
SRSA4815-•••-SL/P1-T2-•-X84K5B							M58x2 x depth 40			103,0	6,4
SRSA4815-•••-SL/P0-T2-•-D94K4B	192	212	234	- 106	- 154	580	M82x2 x depth 40	60	70	128,6	5,7
SRSA4815-•••-SL/P1-T2-•-D94K4B							M58x2 x depth 40			132,1	6,4
SRSA4815-•••-SL/P0-T2-•-D95K5B	192	212	239	- 106	- 154	661	M82x2 x depth 40	60	70	152,0	5,7
SRSA4815-•••-SL/P1-T2-•-D95K5B							M58x2 x depth 40			155,6	6,4
SRSA4820-•••-SL/P0-T1-•-D95KB	192	212	174	- 106	- 154	472	M82x2 x depth 40	50	58	114,4	5,7
SRSA4820-•••-SL/P1-T1-•-D95KB							M58x2 x depth 40			117,9	6,4
SRSA4820-•••-SL/P0-T1-•-D94K3B	192	212	230	- 106	- 154	580	M82x2 x depth 40	50	58	123,8	5,7
SRSA4820-•••-SL/P1-T1-•-D94K3B							M58x2 x depth 40			127,4	6,4
SRSA4820-•••-SL/P0-T2-•-D94K5B	192	212	239	- 106	- 154	599	M82x2 x depth 40	60	70	146,7	5,7
SRSA4820-•••-SL/P1-T2-•-D94K5B							M58x2 x depth 40			150,3	6,4
SRSA4820-•••-SL/P0-T2-•-D94K7B	192	212	247	- 106	- 154	599	M82x2 x depth 40	60	70	153,3	5,7
SRSA4820-•••-SL/P1-T2-•-D94K7B							M58x2 x depth 40			156,8	6,4

(1) Nominal Force: Can be used 100% of time at low speed (10% of maximum speed).
(2) Peak Force: Max Force under short time (1 s max) at low speed with selected drive.
(3) Backlash elimination up to 600 mm stroke, over 20 µ. Standard stroke in 100 mm step. For other stroke, please contact SKF.
(4) Integrated at each end.
(5) See § 4: Motion controllers for Electromechanical cylinders.
(6) Total weight = W_o + (stroke/100) x W_x
* Value to be limited at 80% of Dynamic Load (dynamic phases). Can be used during static phases. Please contact SKF.
** Value must be limited inside the Motion controller. Please contact SKF.

SRSA 48••-••••-SL•

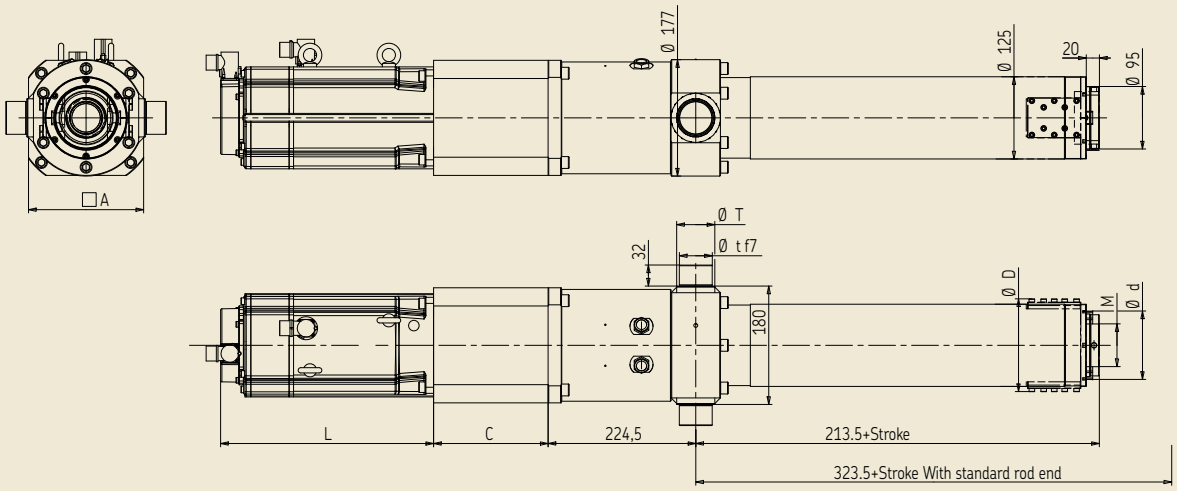

SRSA 48••-••••-SP•

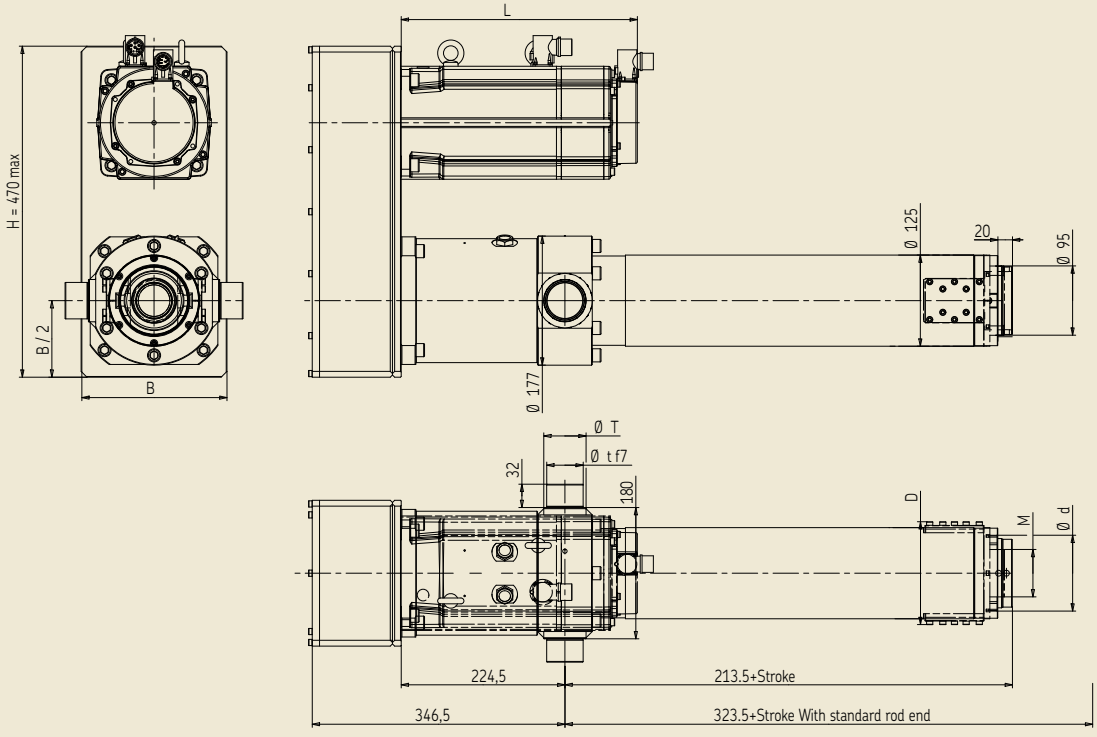

Performance specifications

Designation	Screw lead	Nominal force (1)	Peak force (2)	Linear speed	Standard stroke (3)	Over-stroke (4)	Dynamic load	Nominal power	Controller size (5)
	mm	kN	kN	mm/s	mm	mm	kN	kW	-
SRSA6010-•••-D95KB	10	30,4	59,6	275,0	0 ... 1300	10	303,9	10,7	32
SRSA6010-•••-X84K5B	10	57,8	134,7	116,7	0 ... 1300	10	303,9	6,8	32
SRSA6010-•••-D94K4B	10	92,5	181,8	87,5	0 ... 1300	10	303,9	9,8	32
SRSA6010-•••-D94K7B	10	161,9	318,1*	50,0	0 ... 1300	10	303,9	9,8	32
SRSA6015-•••-D95VJB	15	30,5	45,7	462,5	0 ... 1300	10	303,9	17,4	50
SRSA6015-•••-X86VJ3B	15	55,6	98,2	216,7	0 ... 1300	10	303,9	13,8	50
SRSA6015-•••-X86VJ5B	15	92,7	163,7	130,0	0 ... 1300	10	303,9	13,8	50
SRSA6015-•••-D94K10B	15	162,3	318,7*	52,5	0 ... 1300	10	303,9	9,8	32
SRSA6020-•••-XA30VIB	20	39,9	45,1	666,7	0 ... 1300	10	303,9	26,0	100
SRSA6020-•••-X86VJ4B	20	57,1	100,8	216,7	0 ... 1300	10	303,9	13,8	50
SRSA6020-•••-X86VJ7B	20	99,9	176,3	123,8	0 ... 1300	10	303,9	13,8	50
SRSA6020-•••-X86VJ10B	20	142,7	251,9*	86,7	0 ... 1300	10	303,9	13,8	50

Dimensional specifications

Designation	A	B	C	Ø d	Ø D	L	M	Ø t	Ø T	Weight (6) W_o	W_x
	mm	mm	mm	mm	mm	mm	mm	mm	mm	Kg	Kg/100mm
SRSA6010-•••-SL/P0-T1-•-D95KB	192	212	174	-	-	472	M98x2 x depth 40	60	68	146,7	8,9
SRSA6010-•••-SL/P1-T1-•-D95KB				120	181		M68x2 x depth 40			151,9	9,7
SRSA6010-•••-SL/P0-T1-•-X84K5B	192	212	230	-	-	476	M98x2 x depth 40	60	68	131,8	8,9
SRSA6010-•••-SL/P1-T1-•-X84K5B				120	181		M68x2 x depth 40			137,0	9,7
SRSA6010-•••-SL/P0-T2-•-D94K4B	192	212	234	-	-	580	M98x2 x depth 40	70	80	161,0	8,9
SRSA6010-•••-SL/P1-T2-•-D94K4B				120	181		M68x2 x depth 40			166,1	9,7
SRSA6010-•••-SL/P0-T2-•-D94K7B	192	212	247	-	-	599	M98x2 x depth 40	70	80	185,6	8,9
SRSA6010-•••-SL/P1-T2-•-D94K7B				120	181		M68x2 x depth 40			190,8	9,7
SRSA6015-•••-SL/P0-T1-•-D95VJB	234	254	176	-	-	570	M98x2 x depth 40	60	68	155,4	8,9
SRSA6015-•••-SL/P1-T1-•-D95VJB				120	181		M68x2 x depth 40			160,6	9,7
SRSA6015-•••-SL/P0-T1-•-X86VJ3B	192	212	232	-	-	641	M98x2 x depth 40	60	68	143,9	8,9
SRSA6015-•••-SL/P1-T1-•-X86VJ3B				120	181		M68x2 x depth 40			149,0	9,7
SRSA6015-•••-SL/P0-T2-•-X86VJ5B	192	212	239	-	-	680	M98x2 x depth 40	70	80	165,2	8,9
SRSA6015-•••-SL/P1-T2-•-X86VJ5B				120	181		M68x2 x depth 40			170,4	9,7
SRSA6015-•••-SL/P0-T2-•-D94K10B	192	212	247	-	-	599	M98x2 x depth 40	70	80	185,6	8,9
SRSA6015-•••-SL/P1-T2-•-D94K10B				120	181		M68x2 x depth 40			190,8	9,7
SRSA6020-•••-SL/P0-T1-•-XA30VIB	287	307	237	-	-	582	M98x2 x depth 40	60	68	225,7	8,9
SRSA6020-•••-SL/P1-T1-•-XA30VIB				120	181		M68x2 x depth 40			230,9	9,7
SRSA6020-•••-SL/P0-T1-•-X86VJ4B	192	212	234	-	-	641	M98x2 x depth 40	60	68	147,1	8,9
SRSA6020-•••-SL/P1-T1-•-X86VJ4B				120	181		M68x2 x depth 40			152,2	9,7
SRSA6020-•••-SL/P0-T2-•-X86VJ7B	192	212	247	-	-	680	M98x2 x depth 40	70	80	171,7	8,9
SRSA6020-•••-SL/P1-T2-•-X86VJ7B				120	181		M68x2 x depth 40			176,9	9,7
SRSA6020-•••-SL/P0-T2-•-X86VJ10B	192	212	247	-	-	680	M98x2 x depth 40	70	80	171,7	8,9
SRSA6020-•••-SL/P1-T2-•-X86VJ10B				120	181		M68x2 x depth 40			176,9	9,7

(1) Nominal Force: Can be used 100% of time at low speed (10% of maximum speed).
(2) Peak Force: Max Force under short time (1 s max) at low speed with selected drive.
(3) Backlash elimination up to 800 mm stroke, over 20 µ. Standard stroke in 100 mm step. For other stroke, please contact SKF.
(4) Integrated at each end.
(5) See § 4: Motion controllers for Electromechanical cylinders.
(6) Total weight = W_o + (stroke/100) x W_x

* Value to be limited at 80% of Dynamic Load (dynamic phases). Can be used during static phases. Please contact SKF.

SRSA 60••-••••-SL•

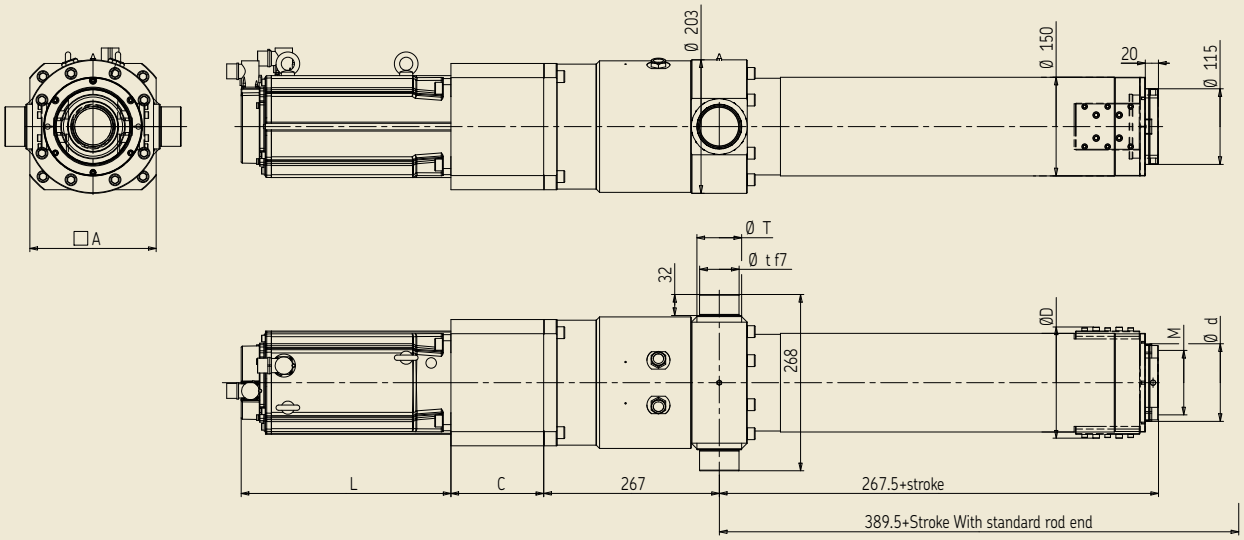

SRSA 60••-••••-SP•

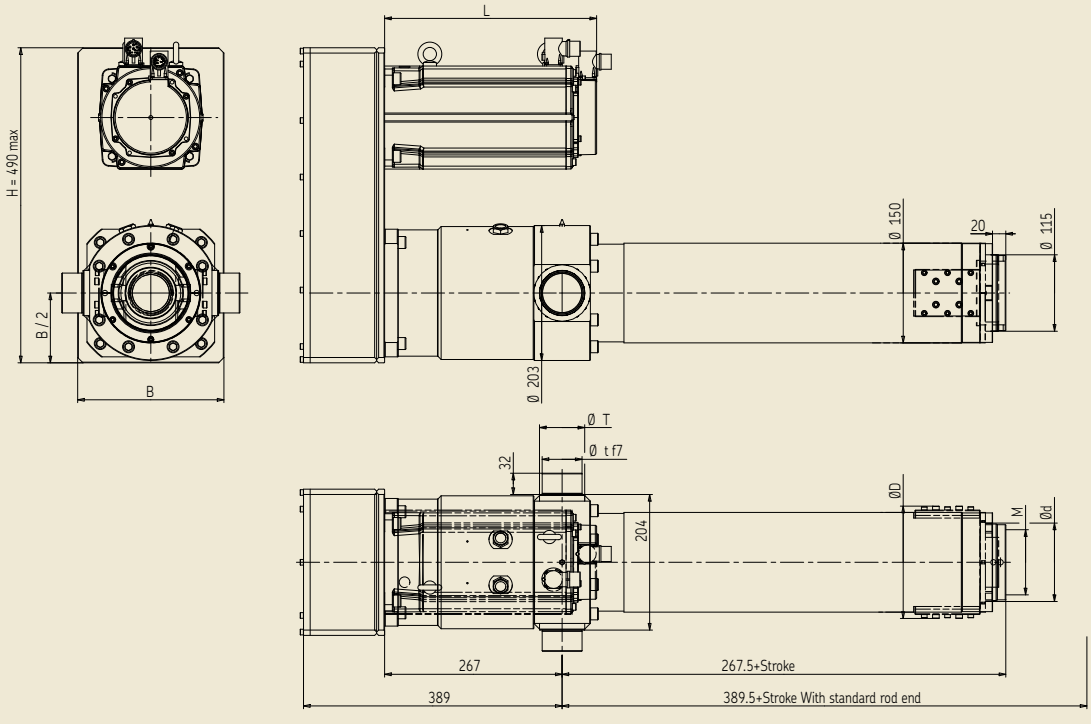

Performance specifications

Designation	Screw lead	Nominal force (1)	Peak force (2)	Linear speed	Standard stroke (3)	Over-stroke (4)	Dynamic load	Nominal power	Controller size (5)
	mm	kN	kN	mm/s	mm	mm	kN	kW	-
SRSA7510-•••-D95JB	10	42,0	63,0	250,0**	0 ... 1500	10	471,6	17,4	50
SRSA7510-•••-X86VJ4B	10	102,2	180,4	108,3	0 ... 1500	10	471,6	13,8	50
SRSA7510-•••-X86VJ7B	10	178,8	315,7	61,9	0 ... 1500	10	471,6	13,8	50
SRSA7510-•••-X86VJ10B	10	255,5	451,0*	43,3	0 ... 1500	10	471,6	13,8	50
SRSA7515-•••-XA30VIB	15	50,6	57,1	375,0**	0 ... 1500	10	471,6	26,0	100
SRSA7515-•••-D95VG4B	15	113,0	153,7	187,5	0 ... 1500	10	471,6	25,5	100
SRSA7515-•••-D95VG5B	15	141,3	192,2	150,0	0 ... 1500	10	471,6	25,5	100
SRSA7515-•••-XA30VI5B	15	240,2	271,3	100,0	0 ... 1500	10	471,6	26,0	100
SRSA7520-•••-XA40VIB	20	52,5	58,9	466,7	0 ... 1500	10	471,6	27,3	100
SRSA7520-•••-XA30VI3B	20	111,5	125,9	222,2	0 ... 1500	10	471,6	26,0	100
SRSA7520-•••-XA30VI4B	20	148,7	167,9	166,7	0 ... 1500	10	471,6	26,0	100
SRSA7520-•••-XA40VI4B	20	199,4	223,9	116,7	0 ... 1500	10	471,6	27,3	100

Dimensional specifications

Designation	A	B	C	Ø d	Ø D	L	M	Ø t	Ø T	Weight (6) W_o	W_x
	mm	mm	mm	mm	mm	mm	mm	mm	mm	Kg	Kg/100mm
SRSA7510-•••-SL/P0-T1-••-D95JB	264	284	176	-	-	570	M125x2 x depth 58	75	88	230,3	11,3
SRSA7510-•••-SL/P1-T1-••-D95JB				145	208		M90x2 x depth 58			237,7	14,0
SRSA7510-•••-SL/P0-T1-••-X86VJ4B	264	284	234	-	-	641	M125x2 x depth 58	75	88	222,0	11,3
SRSA7510-•••-SL/P1-T1-••-X86VJ4B				145	208		M90x2 x depth 58			229,4	14,0
SRSA7510-•••-SL/P0-T2-••-X86VJ7B	264	284	247	-	-	680	M125x2 x depth 58	90	103	246,7	11,3
SRSA7510-•••-SL/P1-T2-••-X86VJ7B				145	208		M90x2 x depth 58			254,1	14,0
SRSA7510-•••-SL/P0-T2-••-X86VJ10B	264	284	247	-	-	680	M125x2 x depth 58	90	103	246,7	11,3
SRSA7510-•••-SL/P1-T2-••-X86VJ10B				145	208		M90x2 x depth 58			254,1	14,0
SRSA7515-•••-SL/P0-T1-••-XA30VIB	287	307	237	-	-	582	M125x2 x depth 58	75	88	300,6	11,3
SRSA7515-•••-SL/P1-T1-••-XA30VIB				145	208		M90x2 x depth 58			308,1	14,0
SRSA7515-•••-SL/P0-T1-••-D95VG4B	264	284	247	-	-	759	M125x2 x depth 58	75	88	271,8	11,3
SRSA7515-•••-SL/P1-T1-••-D95VG4B				145	208		M90x2 x depth 58			279,2	14,0
SRSA7515-•••-SL/P0-T1-••-D95VG5B	264	284	247	-	-	759	M125x2 x depth 58	75	88	271,8	11,3
SRSA7515-•••-SL/P1-T1-••-D95VG5B				145	208		M90x2 x depth 58			279,2	14,0
SRSA7515-•••-SL/P0-T2-••-XA30VI5B	287	307	247	-	-	773	M125x2 x depth 58	90	103	333,2	11,3
SRSA7515-•••-SL/P1-T2-••-XA30VI5B				145	208		M90x2 x depth 58			340,6	14,0
SRSA7520-•••-SL/P0-T1-••-XA40VIB	287	307	242	-	-	660	M125x2 x depth 58	75	88	317,2	11,3
SRSA7520-•••-SL/P1-T1-••-XA40VIB				145	208		M90x2 x depth 58			324,6	14,0
SRSA7520-•••-SL/P0-T1-••-XA30VI3B	287	307	247	-	-	773	M125x2 x depth 58	75	88	333,2	11,3
SRSA7520-•••-SL/P1-T1-••-XA30VI3B				145	208		M90x2 x depth 58			340,6	14,0
SRSA7520-•••-SL/P0-T1-••-XA30VI4B	287	307	247	-	-	773	M125x2 x depth 58	75	88	333,2	11,3
SRSA7520-•••-SL/P1-T1-••-XA30VI4B				145	208		M90x2 x depth 58			340,6	14,0
SRSA7520-•••-SL/P0-T1-••-XA40VI4B	287	307	247	-	-	851	M125x2 x depth 58	75	88	343,2	11,3
SRSA7520-•••-SL/P1-T1-••-XA40VI4B				145	208		M90x2 x depth 58			350,6	14,0

(1) Nominal Force: Can be used 100% of time at low speed (10% of maximum speed).
(2) Peak Force: Max Force under short time (1 s max) at low speed with selected drive.
(3) Backlash elimination up to 1000 mm stroke, over 20 µ. Standard stroke in 100 mm step. For other stroke, please contact SKF.
(4) Integrated at each end.
(5) See § 4: Motion controllers for Electromechanical cylinders.
(6) Total weight = W_o + (stroke/100) x W_x
* Value to be limited at 80% of Dynamic Load (dynamic phases). Can be used during static phases. Please contact SKF.
** Value must be limited inside the Motion controller. Please contact SKF.

SRSA 75••-••••-SL•

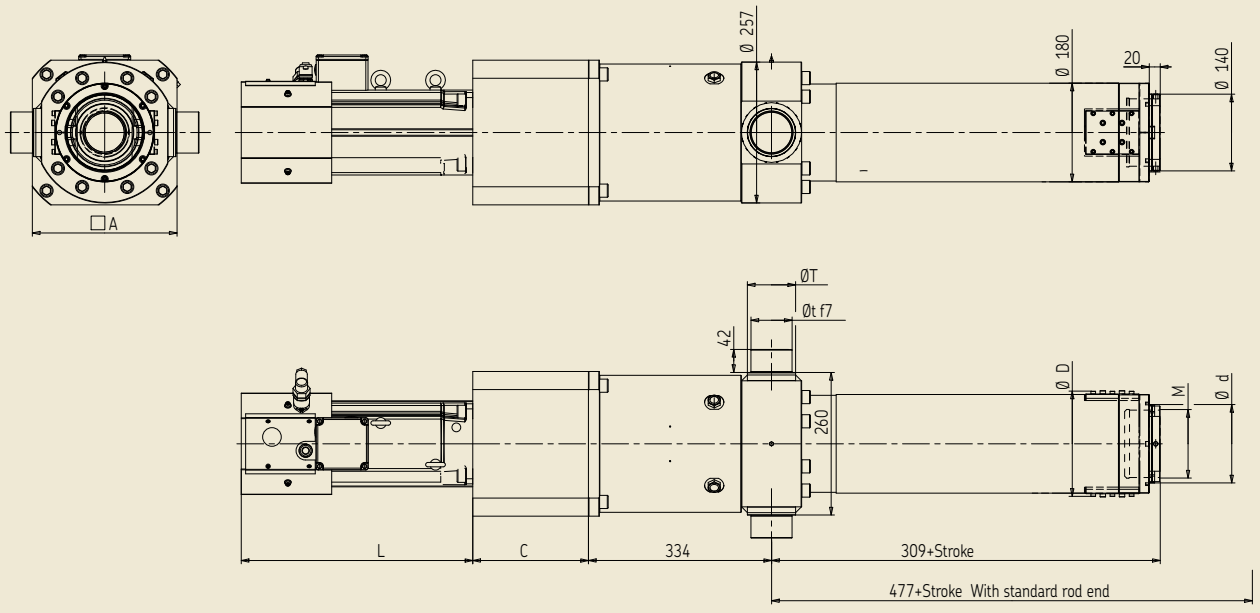

SRSA 75••-••••-SP•

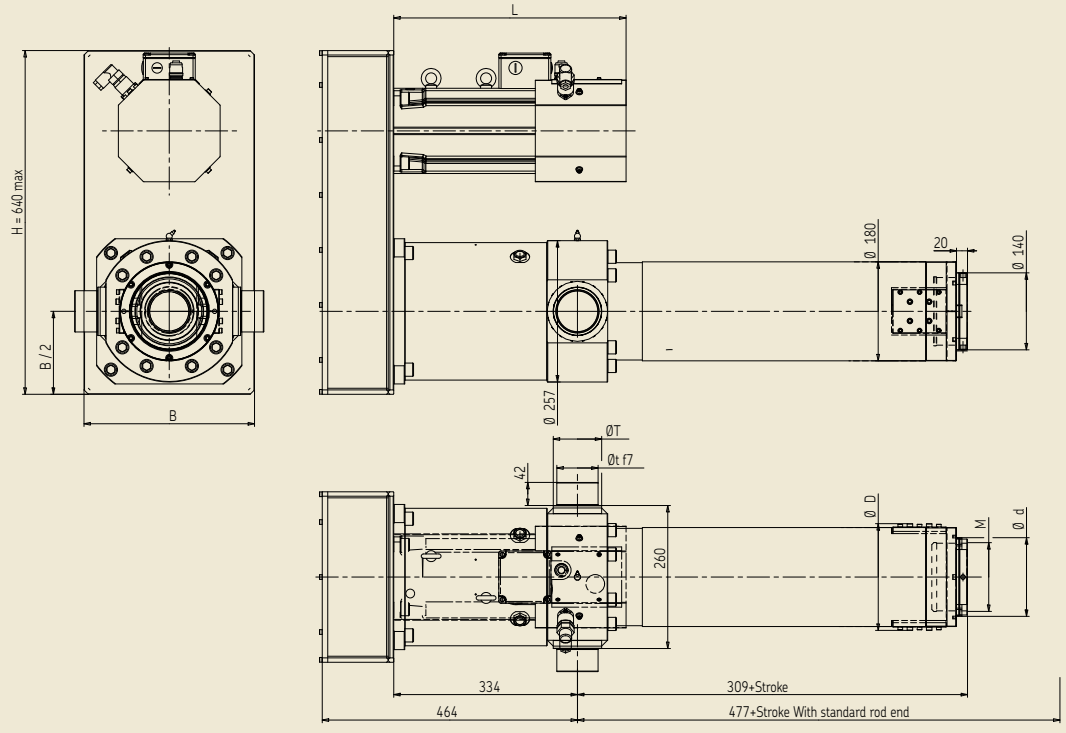

High resolution

The high resolution cylinder consists of an SKF recirculating roller screw with small lead 1 or 2 mm directly driven through a coupling by a brushless motor (without gear). The roller screw converts rotary motion into linear movement.

As the screw rotates,the nut extends and retracts the force tube, which is attached to the load.

The screw is held by a combination of SKF angular contact ball bearings which allow for high resolution and high rigidity; for long strokes the free end of the shaft is supported and guided inside the force tube to prevent any vibration.

The force tube and roller screw nut are guided inside the external tube which gives an axially and radially stiff system. The cylinder is sealed between the force tube and external tube. The unit is designed and finished to suit industrial requirements.

The integrated anti-rotation (option) is made of profile rail guides. This preloaded design provides a very high torsional stiffness and durability.

Two internal bumpers secure the mechanism during the adjustment phase.

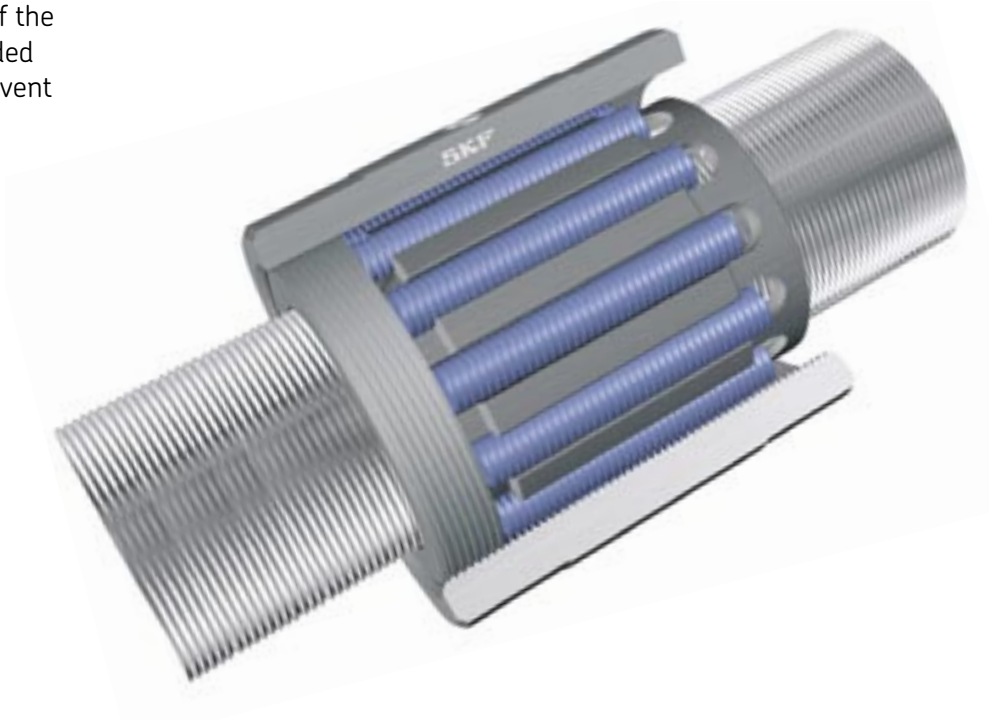

Main benefits

- Easy use and set up.
- Long service life is achieved with a simple power train of motor, coupling and roller screw.
- Designed to meet ultimate positioning accuracy.
- High resolution.
- High durability: no miniature parts.
- High rigidity.
- Less maintenance required due to fewer components.
- Programmable controller.
- Integrated anti-rotation.

Life time selection

SVSA 32



SVSA 40 - SVSA 50

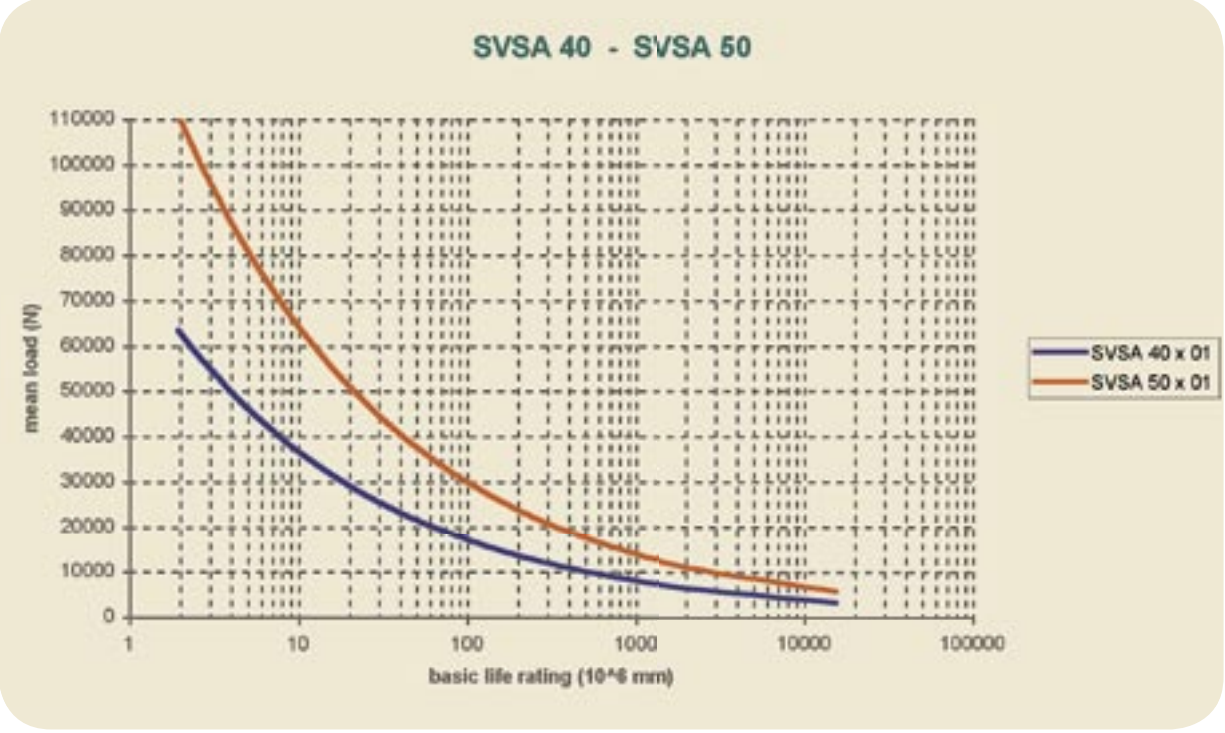

Performance specifications

Designation	Screw lead	Nominal force (1)	Peak force (2)	Linear speed	Standard stroke (3)	Over-stroke (4)	Dynamic load	Nominal power	Controller size (5)
	mm	kN	kN	mm/s	mm	mm	kN	kW	-
SVSA3201-•••-X42VB	1	10,7	20,6	10,4**	0 ... 1000	5	64,3	0,8	02
SVSA3201-•••-X42V4B	1	40,6	78,3*	8,3	0 ... 1000	5	64,3	0,8	02
SVSA3202-•••-X43VB	2	9,6	18,8	20,8**	0 ... 1000	5	64,3	0,5	02
SVSA3202-•••-X43P5B	2	45,8	89,1*	20,0	0 ... 1000	5	64,3	1,5	04

Dimensional specifications

Designation	A	B	C	Ø d	Ø D	L	M	Ø t	Ø T	Weight (6) W_o	W_x
	mm	mm	mm	mm	mm	mm	mm	mm	mm	Kg	Kg/50mm
SVSA3201-•••-SL/P0-T1-••-X42VB	91,5	111,5	107	-	-	226	M42x1,5 x depth 22	25	36	18,8	1,2
SVSA3201-•••-SL/P1-T1-••-X42VB				61	96		M35x1,5 x depth 22			21,5	1,3
SVSA3201-•••-SL/P0-T2-••-X42V4B	98,0	118,0	123	-	-	339	M42x1,5 x depth 22	35	45	22,8	1,2
SVSA3201-•••-SL/P1-T2-••-X42V4B				61	96		M35x1,5 x depth 22			25,5	1,3
SVSA3202-•••-SL/P0-T1-••-X43VB	91,5	111,5	107	-	-	251	M42x1,5 x depth 22	25	36	19,7	1,2
SVSA3202-•••-SL/P1-T1-••-X43VB				61	96		M35x1,5 x depth 22			22,4	1,3
SVSA3202-•••-SL/P0-T2-••-X43P5B	98,0	118,0	125	-	-	364	M42x1,5 x depth 22	35	45	24,1	1,2
SVSA3202-•••-SL/P1-T2-••-X43P5B				61	96		M35x1,5 x depth 22			26,8	1,3

(1) Nominal Force: Can be used 100% of time at low speed (10% of maximum speed).
(2) Peak Force: Max Force under short time (1 s max) at low speed with selected drive.
(3) Backlash elimination up to 600 mm stroke, over 20 µ. Standard stroke in 50 mm step. For other stroke, please contact SKF.
(4) Integrated at each end.
(5) See § 4: Motion controllers for Electromechanical cylinders.
(6) Total weight = W_o + (stroke/50) x W_x

* Value to be limited at 80% of Dynamic Load (dynamic phases). Can be used during static phases. Please contact SKF.
** Value must be limited inside the Motion controller. Please contact SKF.

SVSA 32••-••••-SL•

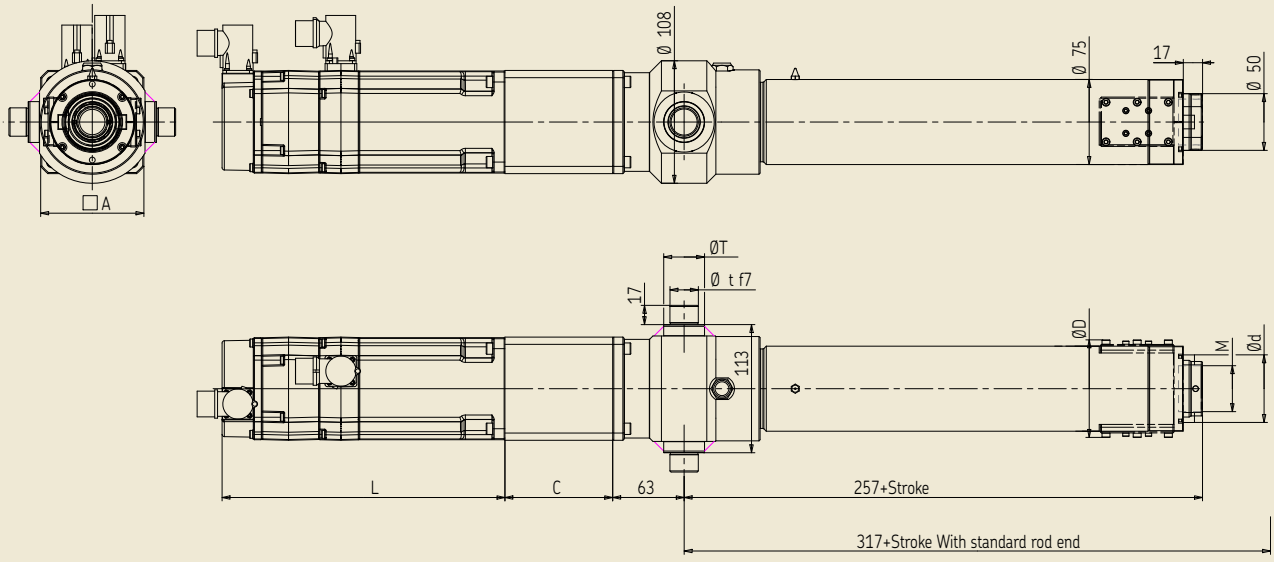

SVSA 32••-••••-SP•

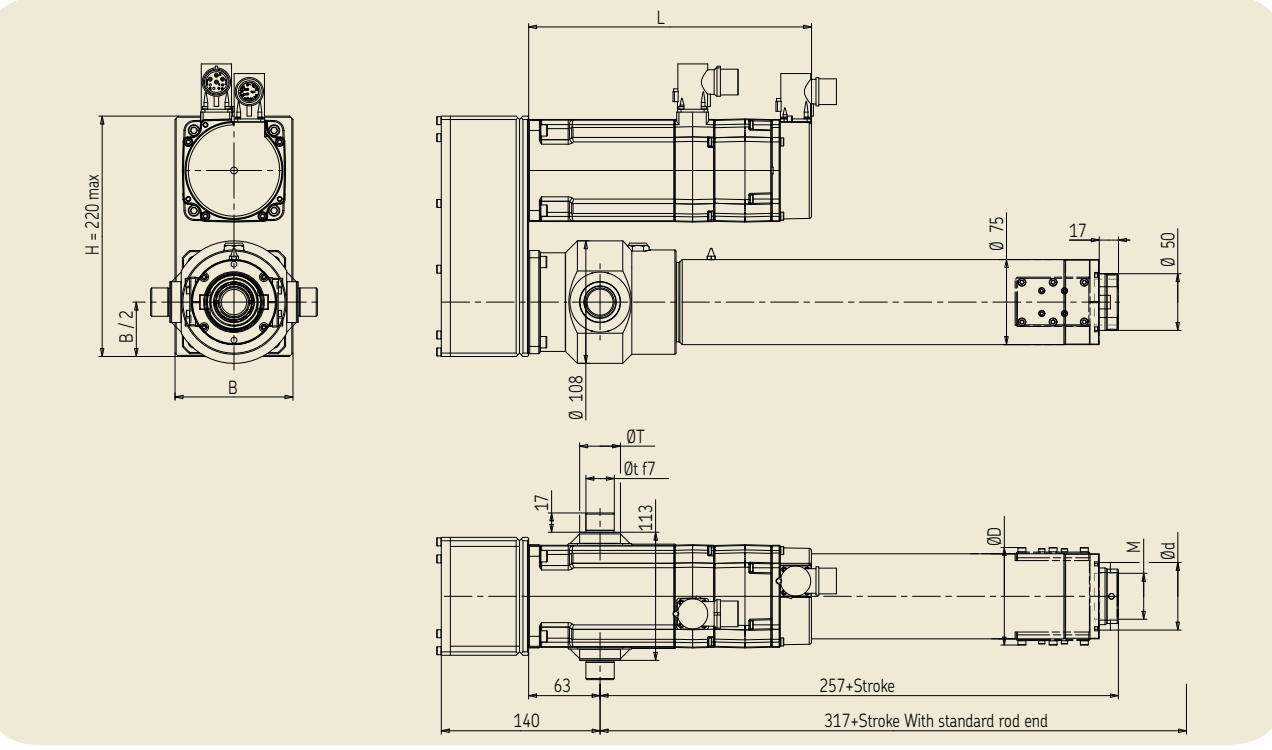

Performance specifications

Designation	Screw lead	Nominal force (1)	Peak force (2)	Linear speed	Standard stroke (3)	Over-stroke (4)	Dynamic load	Nominal power	Controller size (5)
	mm	kN	kN	mm/s	mm	mm	kN	kW	-
SVSA4001-•••-X42VB	1	36,3	70,0*	8,3	0 ... 1000	5	79,1	0,8	02
SVSA4001-•••-X43P5B	1	62,3	121,3*	8,3*	0 ... 1000	5	79,1	1,5	04

Dimensional specifications

Designation	A	B	C	Ø d	Ø D	L	M	Ø t	Ø T	Weight (6) W_o	W_x
	mm	mm	mm	mm	mm	mm	mm	mm	mm	Kg	Kg/50mm
SVSA4001-•••-SL/P0-T2-•-X42VB	115	135	127	-	-	318	M48x2 x depth 30	40	50	30,8	1,6
SVSA4001-•••-SL/P1-T2-•-X42VB				71	105		M44x2 x depth 30			30,6	1,7
SVSA4001-•••-SL/P0-T2-•-X43P5B	115	135	127	-	-	364	M48x2 x depth 30	40	50	31,7	1,6
SVSA4001-•••-SL/P1-T2-•-X43P5B				71	105		M44x2 x depth 30			31,5	1,7

(1) Nominal Force: Can be used 100% of time at low speed (10% of maximum speed).
(2) Peak Force: Max Force under short time (1 s max) at low speed with selected drive.
(3) Backlash elimination up to 600 mm stroke, over 20µ. Standard stroke in 50 mm step. For other stroke, please contact SKF.
(4) Integrated at each end.
(5) See § 4: Motion controllers for Electromechanical cylinders.
(6) Total weight = W_o + (stroke/50) x W_x

* Value to be limited at 80% of Dynamic Load (dynamic phases). Can be used during static phases. Please contact SKF.
** Value must be limited inside the Motion controller. Please contact SKF.

SVSA 40••-••••-SL•

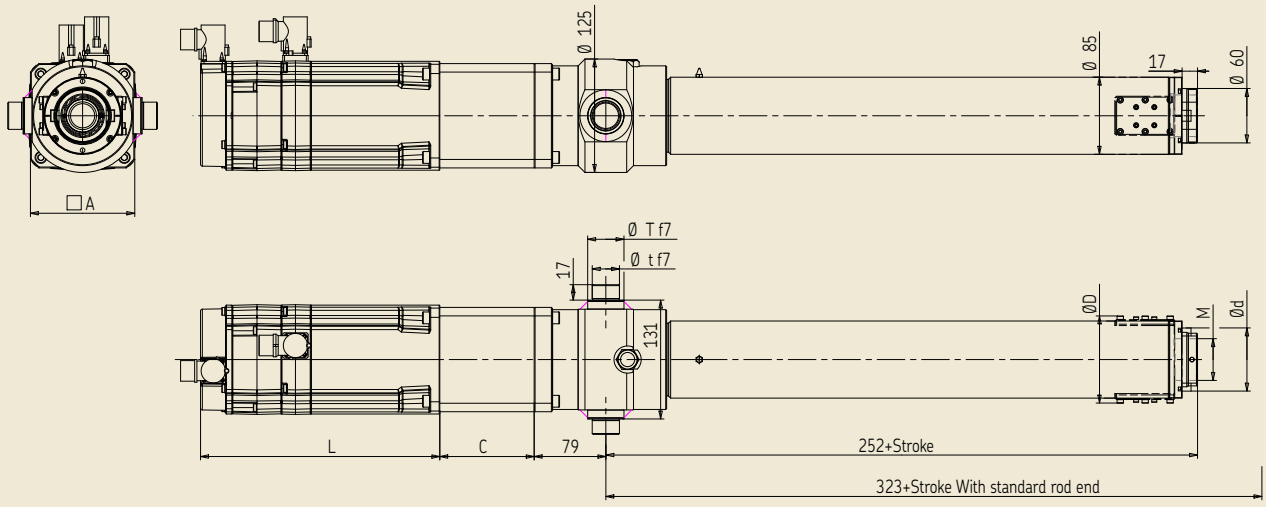

SVSA 40••-••••-SP•

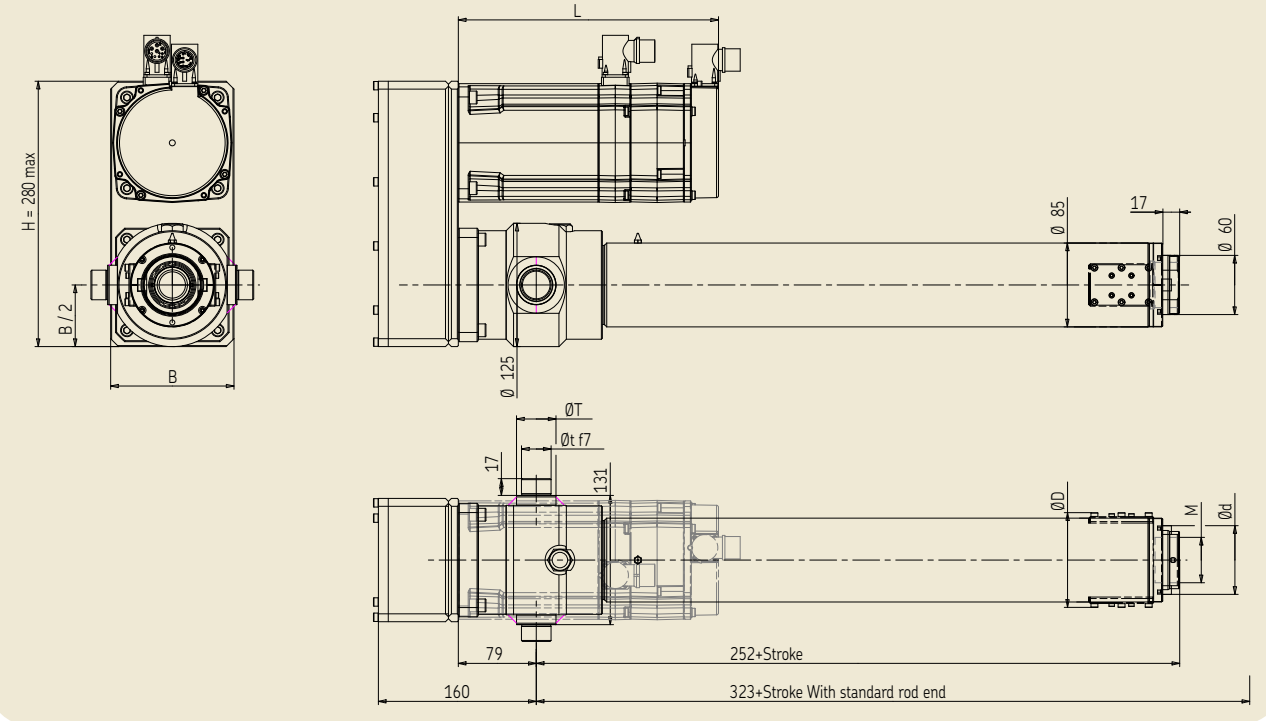

Performance specifications

Designation	Screw lead	Nominal force (1)	Peak force (2)	Linear speed	Standard stroke (3)	Over-stroke (4)	Dynamic load	Nominal power	Controller size (5)
	mm	kN	kN	mm/s	mm	mm	kN	kW	-
SVSA5001-•••-X43P7B	1	77,1	150,1*	6,7**	0 ... 1000	5	138,5	1,5	04
SVSA5001-•••-X43P10B	1	110,2	214,4*	5,0	0 ... 1000	5	138,5	1,5	04

Dimensional specifications

Designation	A	B	C	Ø d	Ø D	L	M	Ø t	Ø T	Weight (6) W_o	W_x
	mm	mm	mm	mm	mm	mm	mm	mm	mm	Kg	Kg/100mm
SVSA5001-•••-SL/P0-T2-•-X43P7B	185	205	150	-	-	364	M62x2 x depth 40	50	59	49,5	4,8
SVSA5001-•••-SL/P1-T2-•-X43P7B				86	126		M56x2 x depth 40			49,2	5,2
SVSA5001-•••-SL/P0-T2-•-X43P10B	185	205	150	-	-	364	M62x2 x depth 40	50	59	49,5	4,8
SVSA5001-•••-SL/P1-T2-•-X43P10B				86	126		M56x2 x depth 40			49,2	5,2

(1) Nominal Force: Can be used 100% of time at low speed (10% of maximum speed).
(2) Peak Force: Max Force under short time (1 s max) at low speed with selected drive.
(3) Backlash elimination up to 600 mm stroke, over 20µ. Standard stroke in 100 mm step. For other stroke, please contact SKF.
(4) Integrated at each end.
(5) See § 4: Motion controllers for Electromechanical cylinders.
(6) Total weight = W_o + (stroke/100) x W_x

* Value to be limited at 80% of Dynamic Load (dynamic phases). Can be used during static phases. Please contact SKF.
** Value must be limited inside the Motion controller. Please contact SKF.

SVSA 50••-••••-SL•

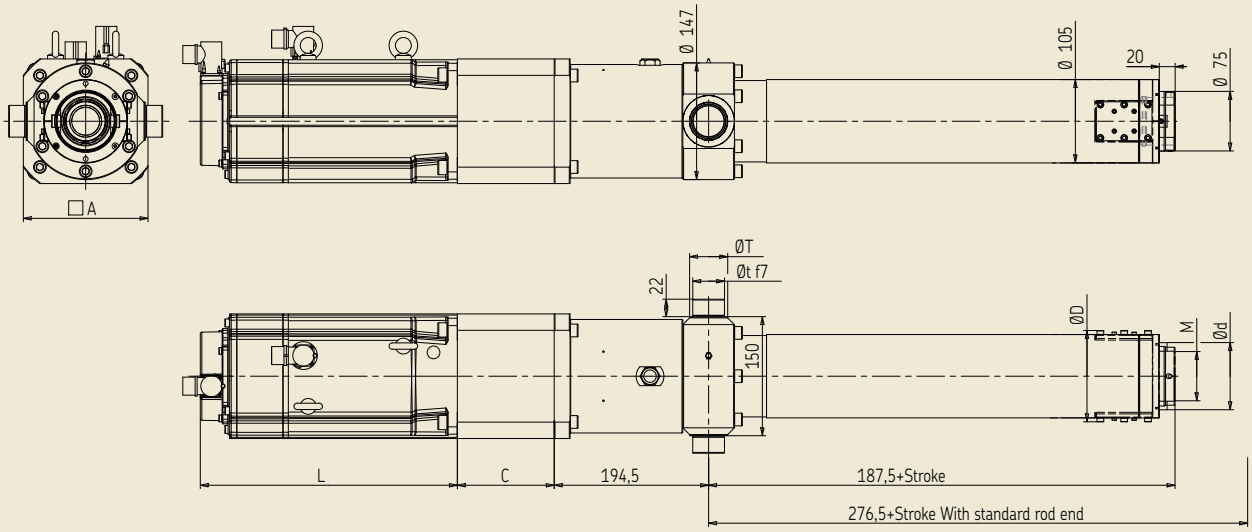

SVSA 50••-••••-SP•

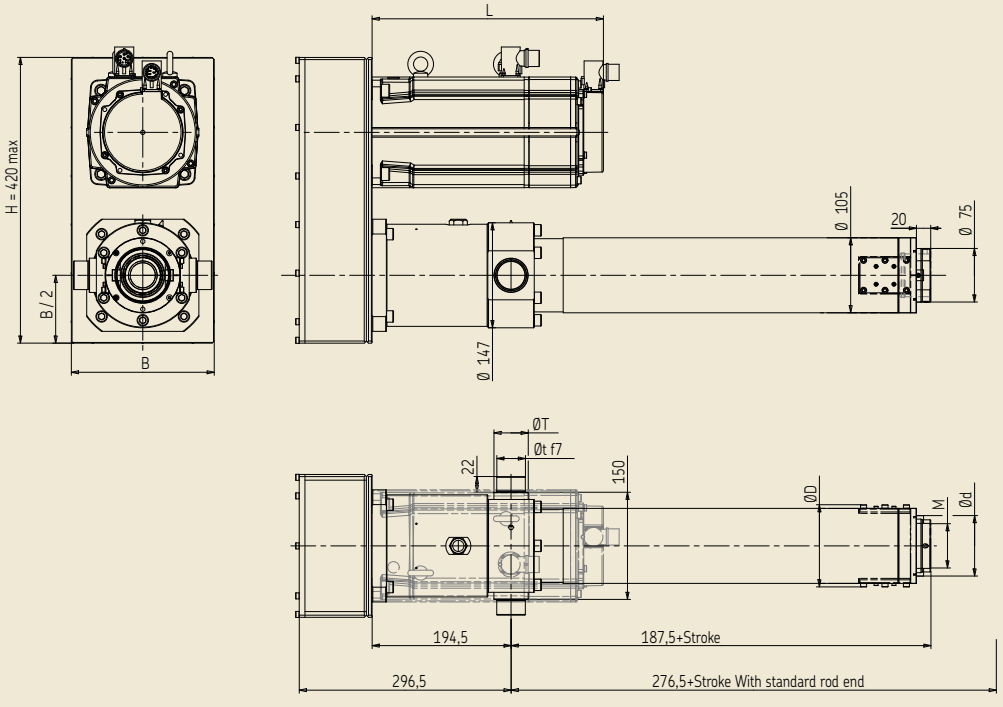

High speed

The high speed cylinder consists of an SKF long lead ball screw directly driven through a coupling by a brushless motor. The ball screw converts rotary motion into linear movement.

As the screw rotates, the nut extends and retracts the force tube, which is attached to the load.

The screw is held by a combination of SKF angular contact ball bearings which allow for high speed and high rigidity; for long strokes the free end of the shaft is supported and guided inside the force tube to prevent any vibration.

The force tube and ball screw nut are guided inside the external tube which gives an axially and radially stiff system. The cylinder is sealed between the force tube and external tube. The unit is designed and finished to suit industrial requirements.

The integrated anti-rotation (option) is made of profile rail guides. This preloaded design provides a very high torsional stiffness and durability.

Two internal bumpers secure the mechanism during the adjustment phase.



Main benefits

- Easy use and set up.
- Long service life is achieved with a simple power train of motor, coupling and ball screw.
- Permit faster operation and longer travel under high load.
- High acceleration capability.
- Low noise level.
- Less maintenance required due to fewer components.
- Programmable controller.
- Integrated anti-rotation.

Life time selection

SLSA 25 - SLSA 40

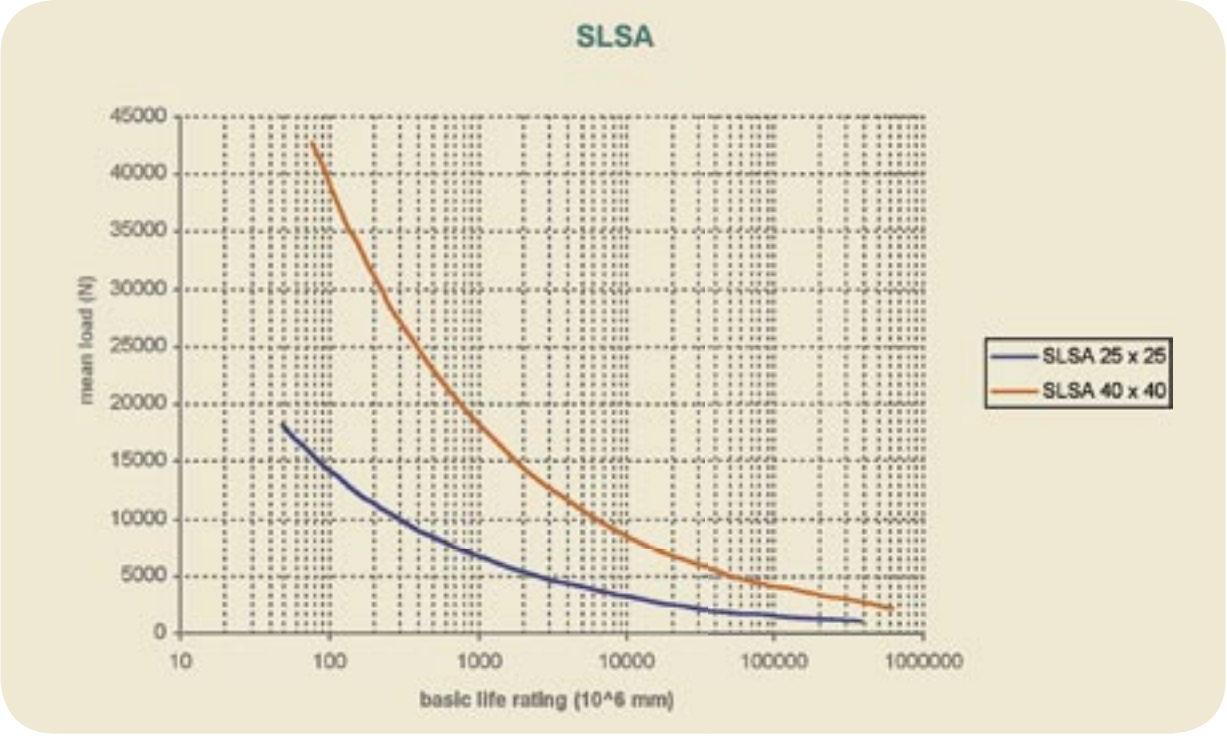



Performance specifications

Designation	Screw lead	Nominal force (1)	Peak force (2)	Linear speed	Standard stroke (3)	Over-stroke (4)	Dynamic load	Nominal power	Controller size (5)
	mm	kN	kN	mm/s	mm	mm	kN	kW	-
SLSA2525-•••-X63NB	25	2,4	5,8	1500,0**	0 ... 500	5	22,6	3,2	16
SLSA2525-•••-X82RB	25	3,2	6,2	1500,0**	0 ... 500	5	22,6	5,3	16
SLSA2525-•••-X84KB	25	5,6	13,0	458,3	0 ... 500	5	22,6	6,8	32
SLSA2525-•••-X86JB	25	8,2	18,8	1083,3	0 ... 500	5	22,6	7,5	32

Dimensional specifications

Designation	A	B	C	Ø d	Ø D	L	M	Ø t	Ø T	Weight (6) W_o	W_x
	mm	mm	mm	mm	mm	mm	mm	mm	mm	Kg	Kg/50mm
SLSA2525-•••-SL/P0-T1-•-X63NB	121	141	121	-	-	265	M48x2 x depth 30	30	40	29,8	1,3
SLSA2525-•••-SL/P1-T1-•-X63NB				71	105		M44x2 x depth 30			29,4	1,2
SLSA2525-•••-SL/P0-T1-•-X82RB	158	178	129	-	-	266	M48x2 x depth 30	30	40	36,3	1,3
SLSA2525-•••-SL/P1-T1-•-X82RB				71	105		M44x2 x depth 30			35,9	1,2
SLSA2525-•••-SL/P0-T1-•-X84KB	158	178	129	-	-	326	M48x2 x depth 30	30	40	43,3	1,3
SLSA2525-•••-SL/P1-T1-•-X84KB				71	105		M44x2 x depth 30			42,9	1,2
SLSA2525-•••-SL/P0-T1-•-X86JB	158	178	129	-	-	386	M48x2 x depth 30	30	40	50,3	1,3
SLSA2525-•••-SL/P1-T1-•-X86JB				71	105		M44x2 x depth 30			49,9	1,2

(1) Nominal Force: Can be used 100% of time at low speed (10% of maximum speed).
(2) Peak Force: Max Force under short time (1 s max) at low speed with selected drive.
(3) Backlash elimination. Standard stroke in 50 mm step. For other stroke, please contact SKF.
(4) Integrated at each end.
(5) See § 4: Motion controllers for Electromechanical cylinders.
(6) Total weight = W_o + (stroke/50) x W_x

** Value must be limited inside the Motion controller. Please contact SKF.

SLSA 25••-••••-SL•

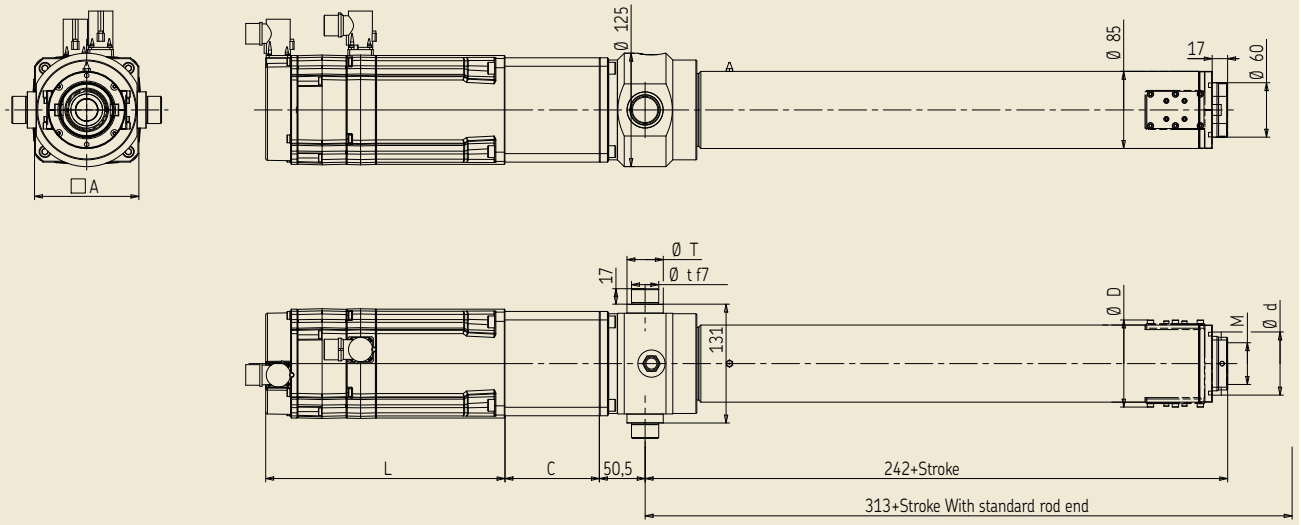

SLSA 25••-••••-SP•

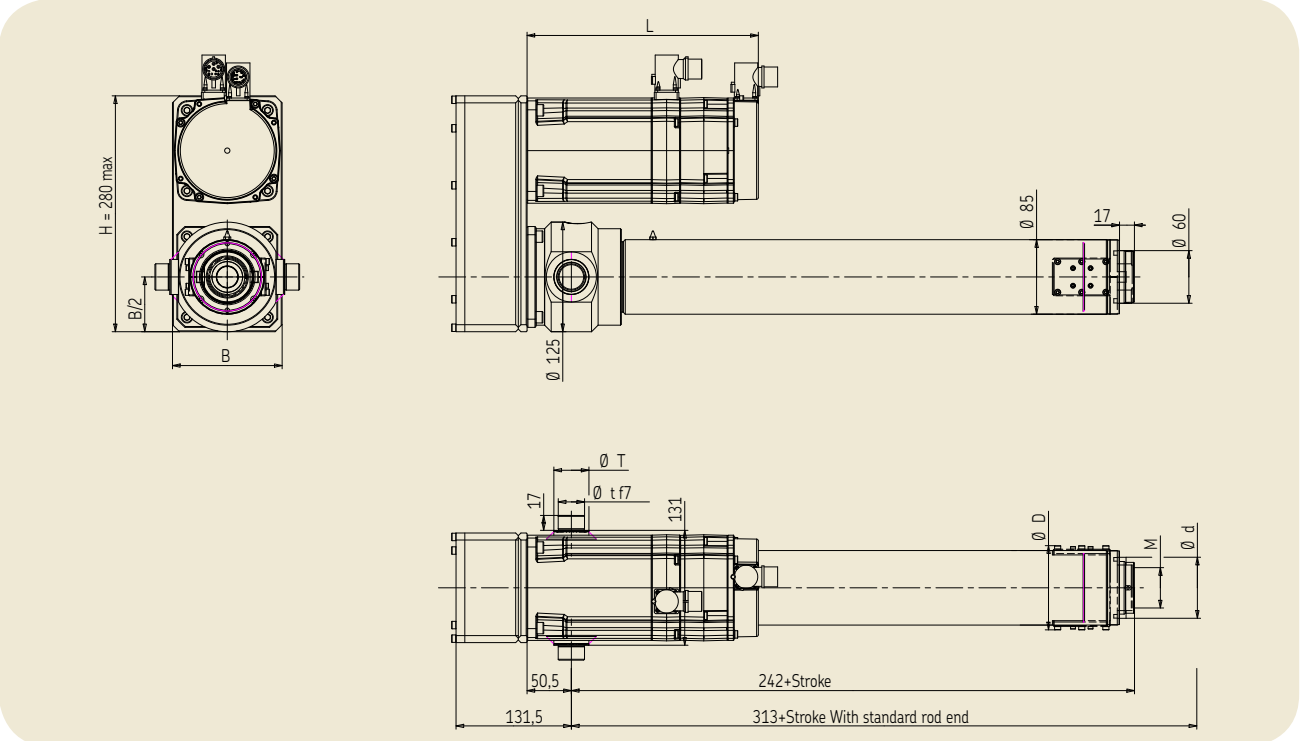

Performance specifications

Designation	Screw lead	Nominal force (1)	Peak force (2)	Linear speed	Standard stroke (3)	Over-stroke (4)	Dynamic load	Nominal power	Controller size (5)
	mm	kN	kN	mm/s	mm	mm	kN	kW	-
SLSA4040-•••-X84QB	40	3,5	7,4	1400,0	0 ... 1200	5	53,3	5,1	16
SLSA4040-•••-X86JB	40	5,1	11,7	1500,0**	0 ... 1200	5	53,3	7,5	32
SLSA4040-•••-D95IB	40	8,7	15,1	1500,0**	0 ... 1200	5	53,3	13,6	50
SLSA4040-•••-D95VJB	40	12,4	18,7	1233,3	0 ... 1200	5	53,3	17,4	50

Dimensional specifications

Designation	A	B	C	Ø d	Ø D	L	M	Ø t	Ø T	Weight (6) Stroke "0"	
	mm	mm	mm	mm	mm	mm	mm	mm	mm	Kg	Kg/100mm
SLSA4040-•••-SL/P0-T1-•-X84QB	192	212	174	-	-	326	M82x2 x depth 40	50	58	81,1	7,0
SLSA4040-•••-SL/P1-T1-•-X84QB				106	154		M58x2 x depth 40			79,0	5,7
SLSA4040-•••-SL/P0-T1-•-X86JB	192	212	174	-	-	386	M82x2 x depth 40	50	58	88,1	7,0
SLSA4040-•••-SL/P1-T1-•-X86JB				106	154		M58x2 x depth 40			86,0	5,7
SLSA4040-•••-SL/P0-T1-•-D95IB	192	212	174	-	-	472	M82x2 x depth 40	50	58	110,8	7,0
SLSA4040-•••-SL/P1-T1-•-D95IB				106	154		M58x2 x depth 40			108,7	5,7
SLSA4040-•••-SL/P0-T1-•-D95VJB	234	254	186	-	-	570	M82x2 x depth 40	50	58	119,4	7,0
SLSA4040-•••-SL/P1-T1-•-D95VJB				106	154		M58x2 x depth 40			117,3	5,7

(1) Nominal Force: Can be used 100% of time at low speed (10% of maximum speed).
(2) Peak Force: Max Force under short time (1 s max) at low speed with selected drive.
(3) Backlash elimination. Standard stroke in 100 mm step. For other stroke, please contact SKF.
(4) Integrated at each end.
(5) See § 4: Motion controllers for Electromechanical cylinders.
(6) Total weight = W_o + (stroke/100) x W_x

** Value must be limited inside the Motion controller. Please contact SKF.

SLSA 40••-••••-SL•

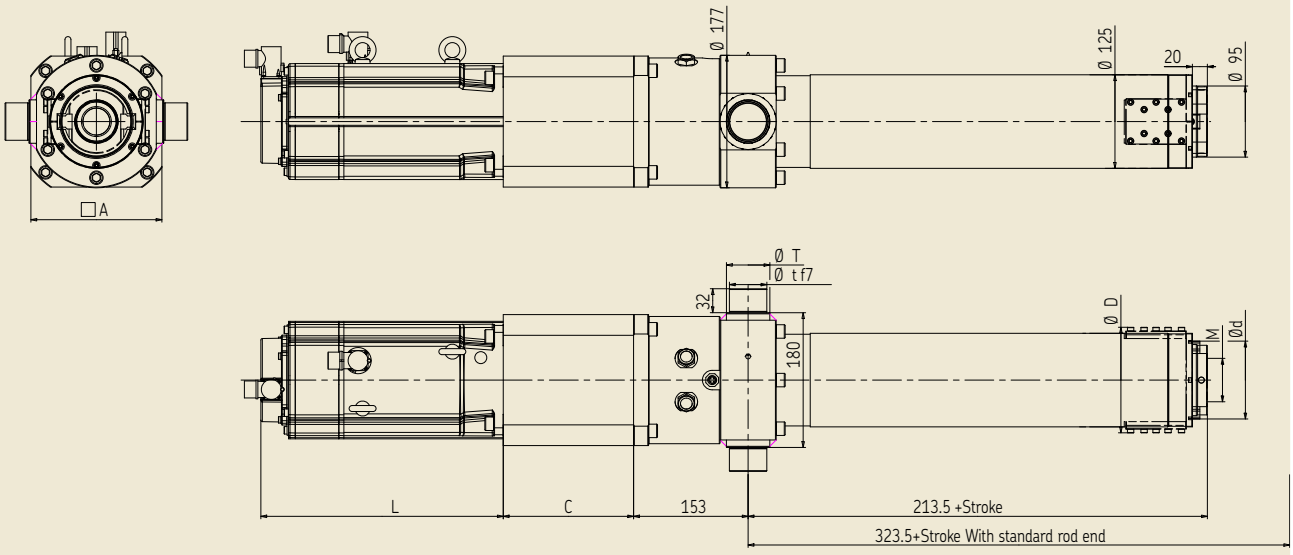

SLSA 40••-••••-SP•

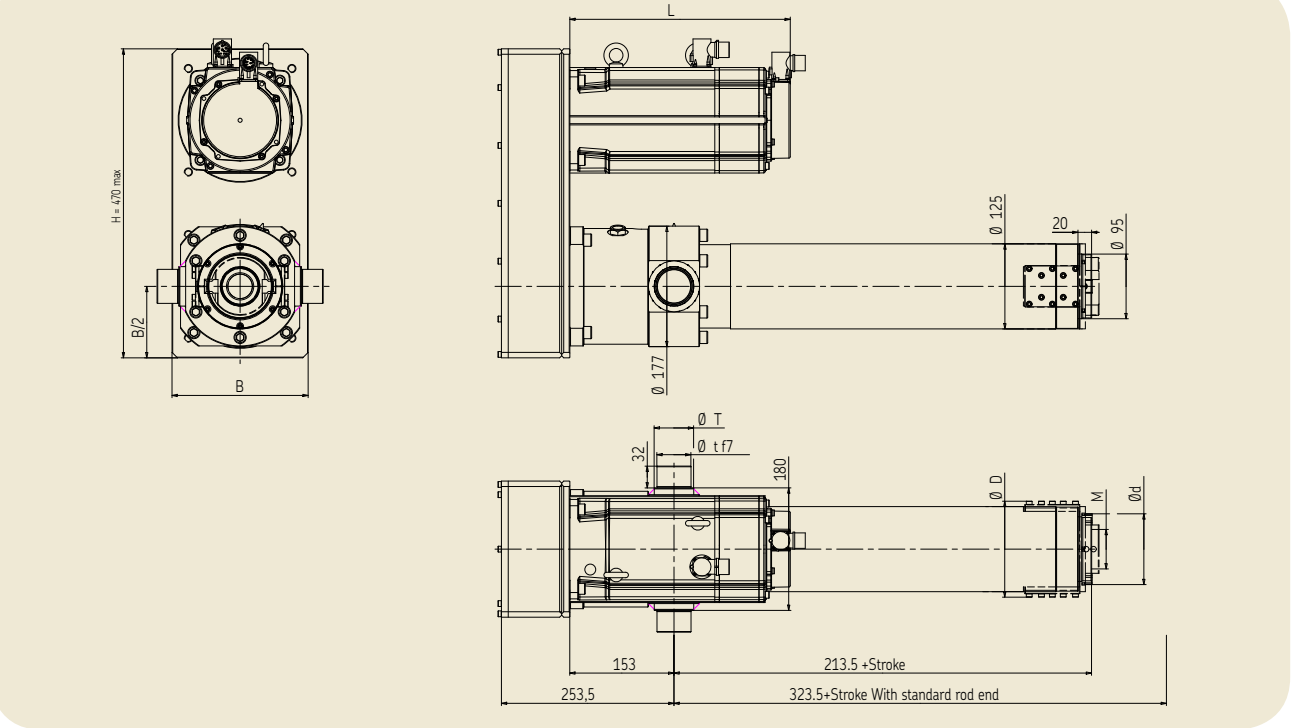

Front attachment

Cylinder size	Ø m6 axe (1)	F dyn max
	mm	kN
SRSA25••/SVSA32••	25	28,0
SRSA30••/SVSA40••/ SLSA25••	30	37,8
SRSA39••/SVSA50••	40	56,0

(1) The tolerance of the axis has to be in accordance with the recommendation given on the SKF spherical plain bearings and rod end catalogue - publication 4407.

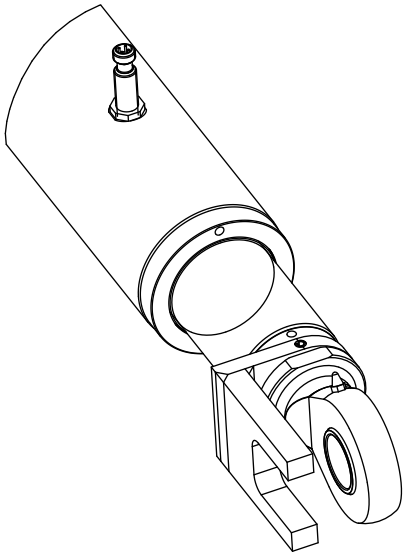

R3

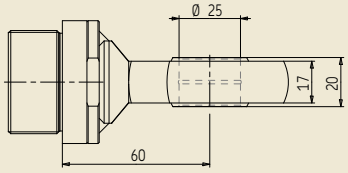

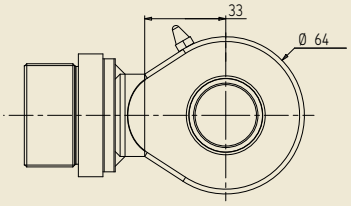

R2

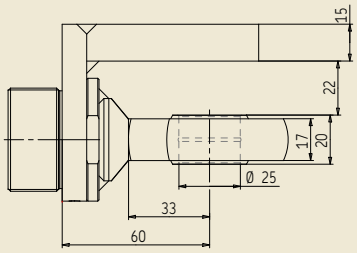

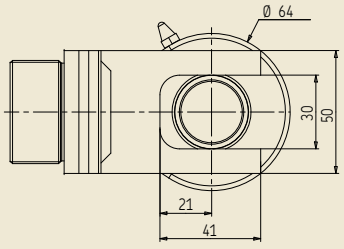

SRSA25•• / SVSA32••

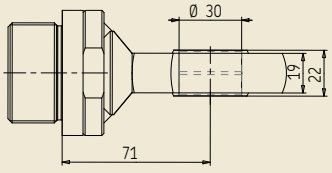

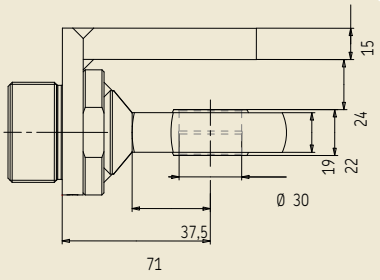

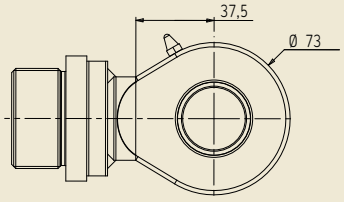

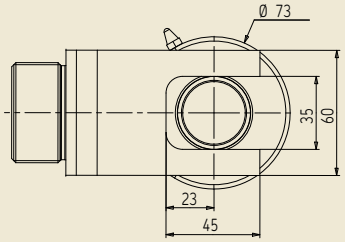

SRSA30•• / SVSA40•• / SLSA25••

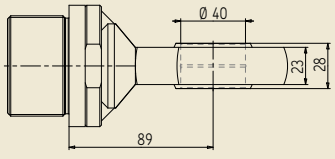

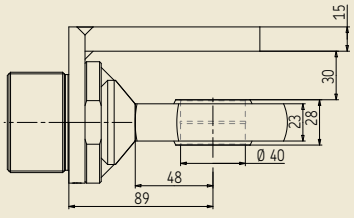

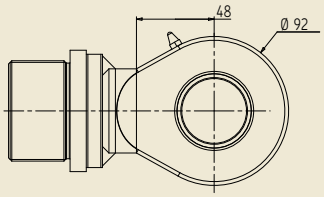

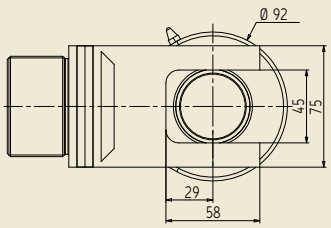

SRSA39•• / SVSA50••

Front attachment

Cylinder size	Ø m6 axe (1)	F dyn max
	mm	kN
SRSA48••/SLSA40••	50	91
SRSA60••	60	145
SRSA75••	80	238

(1) The tolerance of the axis has to be in accordance with the recommendation given on the SKF spherical plain bearings and rod end catalogue - publication 4407.

R3 R2

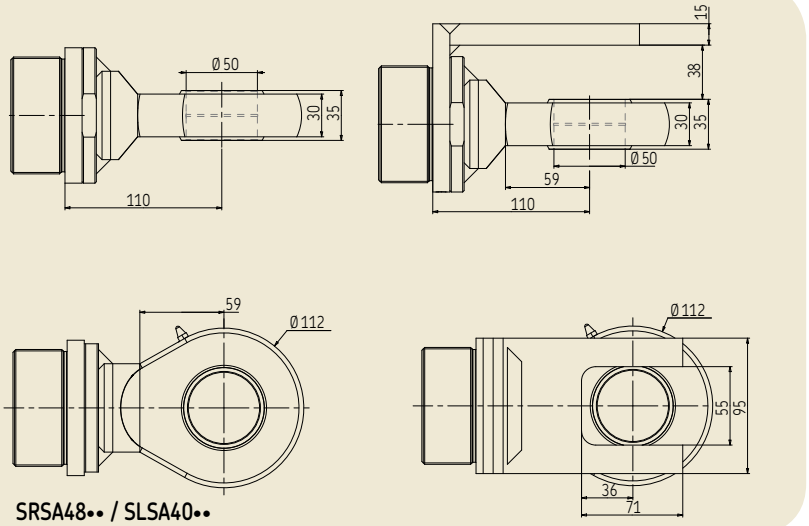

SRSA48•• / SLSA40••

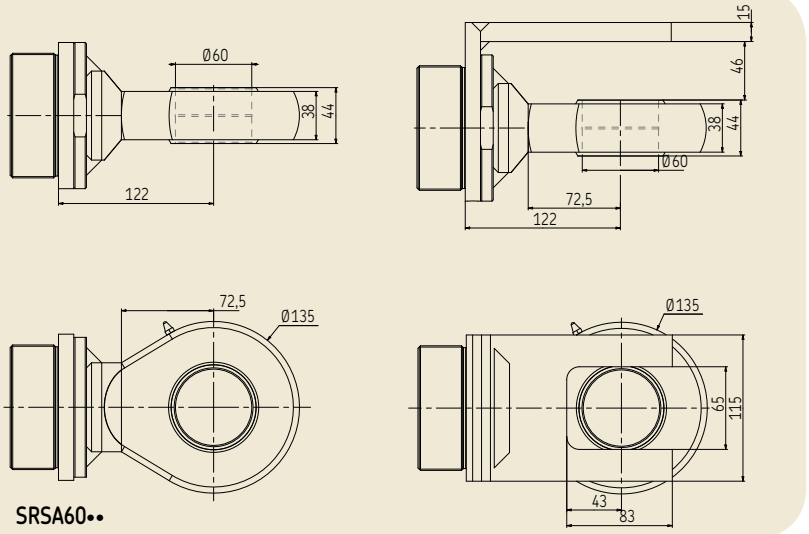

SRSA60••

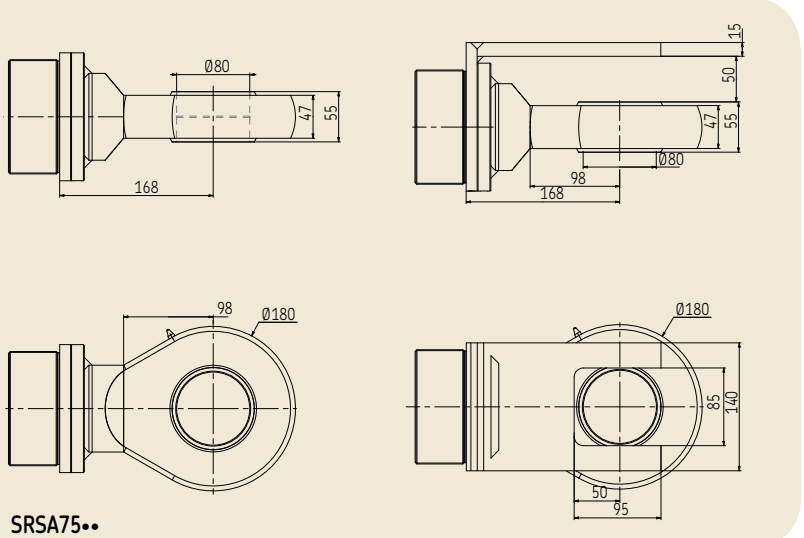

SRSA75••

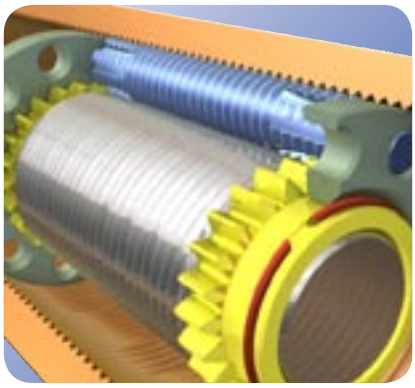





Compact Electro-Mechanical Cylinders (CEMC)

Compact Electromechanical cylinders are designed to deliver the combination of a dynamic flexible actuation packaged with powerful performance.



The new standard for high performance motion

• **Dynamic with high power for optimised process or machine control:**
The design minimises inertia allowing excellent control, responsive performance, significantly improved cycle times and high productivity. The CEMC range integrates proven and patented technologies in a compact robust package.

Attributes include high efficiency, acceleration, speed, precision, stiffness, repeatability and load for a long life resulting in high reliability and maximised machine availability.

• **Compact and ultra compact** for all applications:
This product range provides high power density in a small package. Approximately 40 % shorter for the compact, and 60 % for ultra-compact than modular electromechanical cylinders, there is the added advantage of reduced weight.

Ideal for fixed and robot mounted applications, retrofit of hydraulic cylinders is easy.

Whatever the requirement, CEMC cylinders provide a compact and dynamic solution, maximum performance and value through high availability, productivity and consequent low through life costs.



Main benefits

- Clean
- Stiff
- Low energy consumer
- Smaller size lower weight
- Quick response time
- Maintenance free
- Robust and reliable
- Maximised availability
- Low through life costs

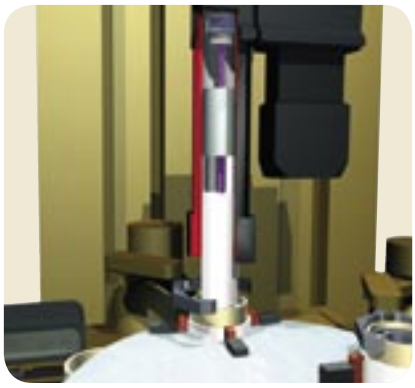

Performance

- Motor peak power up to 30 kw
- Fully integrated solution
  - *Fail safe brake*
  - *Programmable limit switches*
  - *Anti-rotation device*
  - *Programmable home switch*
- Stand-alone system
- Programmable controller
- Instantaneous acceleration.
- Maximum stroke: 170 mm; for longer, contact SKF.



Designation

CEMC | 24 | 04 - 170 - 1 - 62L | B - L - 05 - MC | 08 | P

Cylinder type
CEMC = Compact electro mechanical cylinder

Screw Diameter mm
18 = Diameter 18
24 = Diameter 24
30 = Diameter 30

Screw Lead mm
04 = Lead 3,75 or 4
06 = Lead 6

Stroke mm
090 = Stroke 90
127 = Stroke 125
135 = Stroke 135
170 = Stroke 170

Design attachment
1 = Front
2 = Trunnion and rod end
3 = Front and Anti-Rotation

Motor
Motor designation

Fail safe brake
B if requested

Integrated Load cell
L if requested

Cable length (Motor power, resolver)
05 = 5 metres (standard)
10 = 10 metres
15 = 15 metres
20 = 20 metres

Servoamplifier type
MC = Motion Controller
SC = Speed Controller

Nominal current of servoamplifier (A)
08 = Nominal current 8 A
16 = Nominal current 16 A
xx = Nominal current xx A

Fieldbus interface
C = CanOpen
P = Profibus

Compact Range

Performances specifications

Designation	Screw lead	Nominal force (1)	Peak force (2)	Linear speed	Standard stroke	Over-stroke (4)	Dynamic load	Nominal power	Controller size
	mm	kN	kN	mm/s	mm	mm	kN	kW	-
CEMC1804-145-1-42J	3,75	4,7	10,3	350	145	1	26,6	1,6	08
CEMC2404-•••-•-62L	4,00	8,7	23,8	300	125-135-170	1	61,0	2,6	16
CEMC2406-125-•-62L	6,00	5,8	15,9	450	125	1	61,0	2,6	16
CEMC2404-•••-•-63I	4,00	13,1	26,0	300	125-135-170	1	61,0	3,3	16
CEMC2406-125-•-63I	6,00	8,7	17,3	450	125	1	61,0	3,3	16

Ultra Compact Range

Performances specifications

Designation	Screw lead	Nominal force (1)	Peak force (2)	Linear speed	Standard stroke	Over-stroke (4)	Dynamic load	Nominal power	Controller size
	mm	kN	kN	mm/s	mm	mm	kN	kW	-
CEMC2104-170-•-D63L	4	9,0	17,9	353	170	1	48,1	2,3	16
CEMC2404-•••-2-D82P	4	14,1	28,2	320	90-170	1	61,0	4,7	16
CEMC2406-•••-2-D82P	6	9,4	18,8	480	90-170	1	61,0	4,7	16
CEMC3004-•••-2-D82P	4	14,1	28,2	266	90-170	1	105,0	3,9	16
CEMC3006-•••-2-D82P	6	9,4	18,8	400	90-170	1	105,0	3,9	16
CEMC3004-•••-2-D84H	4	27,4	53,1	266	90-170	1	105,0	6,2	32
CEMC3006-•••-2-D84H	6	18,3	35,4	400	90-170	1	105,0	6,2	32
CEMC3004-•••-2-D86F	4	39,5	83,4	266	90-170	1	105,0	6,6	50
CEMC3006-•••-2-D86F	6	26,3	55,6	400	90-170	1	105,0	6,6	50

(1) Nominal Force: Can be used 100% of time at low speed (10% of maximum speed).
(2) Peak Force: Max Force under short time (1 s max) at low speed with selected drive.
(4) Integrated at each end.



Dimensional data

Designation	Standard stroke	L*	Weight**
	mm	mm	Kg
CEMC1804-145-1-42J	145	376,8	9,1

* For Brake option, add 50,7 mm
** For Brake option, add 0,8 kg

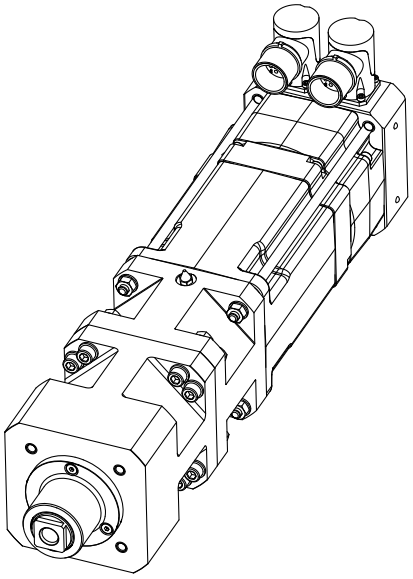

CEMC1804-145-1-42J - Design 1

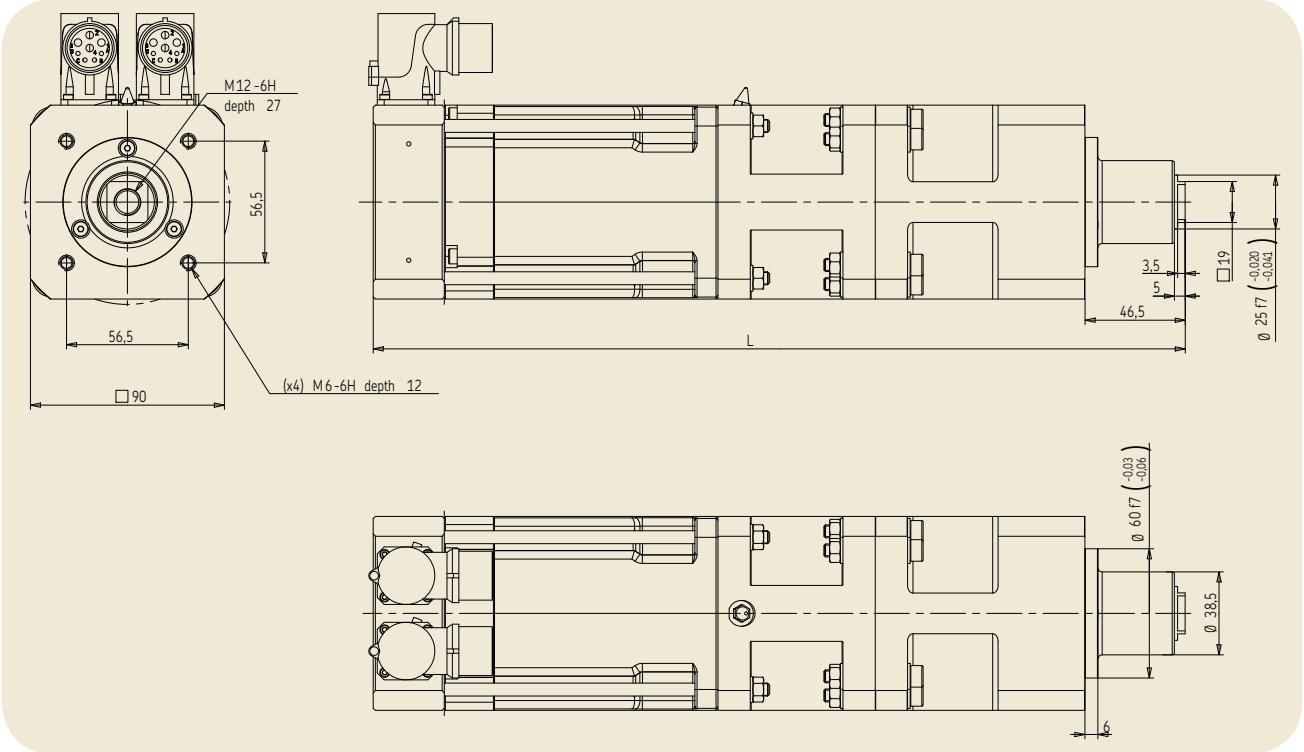

Dimensional data

Designation	Standard stroke	L* Design 1	L* Design 2	Weight** Design 1	Weight** Design 2
	mm	mm	mm	Kg	Kg
	125	391,4	407	13,8	12,6
CEMC2404-•••-•-62L	135	399,4	415	13,9	12,7
	170	434,4	450	14,6	13,1
CEMC2406-125-•-62L	125	391,4	407	13,8	12,6
	125	420,4	436	15,8	14,6
CEMC2404-•••-•-63I	135	428,4	444	15,9	14,7
	170	463,4	479	16,6	15,1
CEMC2406-125-•-63I	125	420,4	436	15,8	14,6

* For Brake option, add 54,2 mm
** For Brake option, add 2,5 kg

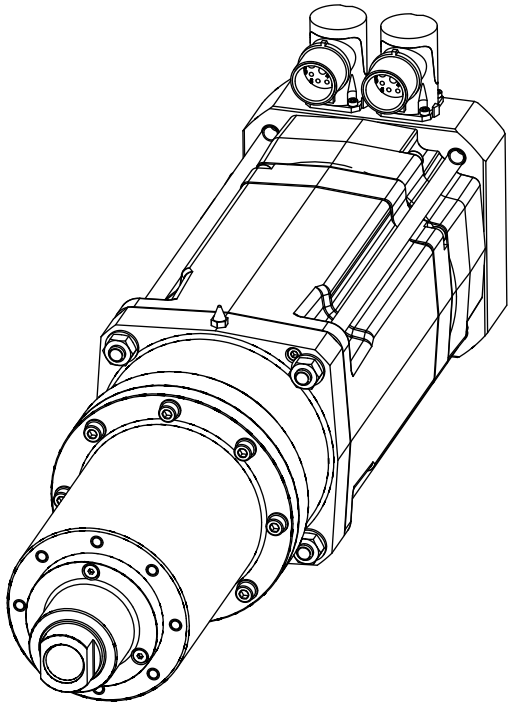

CEMC24••-•••-1-6•• - Design 1

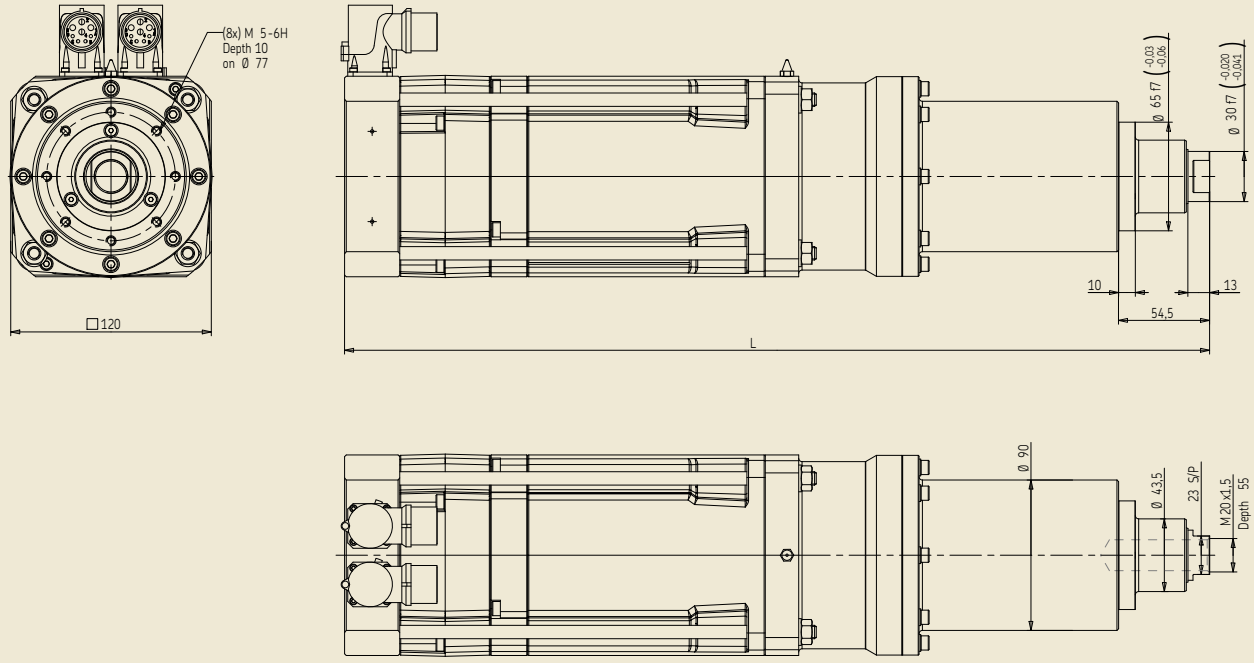

CEMC24••-•••2-6•• - Design 2

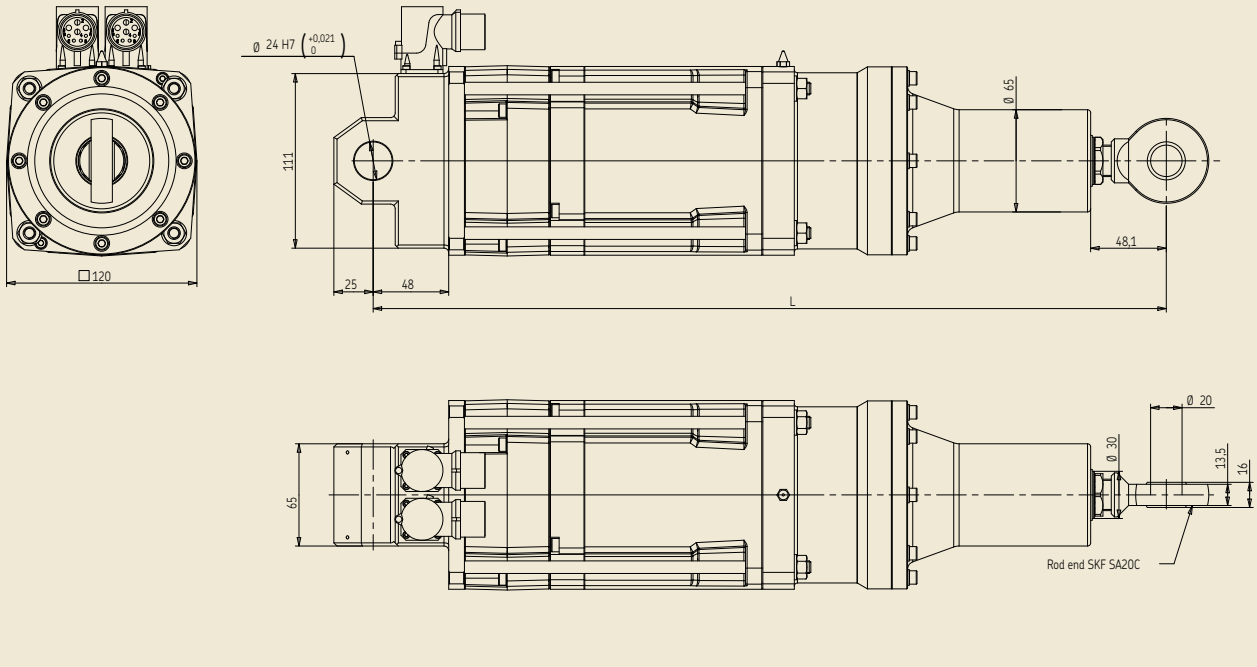

3

Dimensional data

Designation	Standard stroke	L*	Weight** Design 1	Weight** Design 2	Weight** Design 3
	mm	mm	Kg	Kg	Kg
CEMC2104-170-•-D63L	170	see drawings	18,6	19,3	22,5

* For Brake option, no added length
** For Brake option, add 0,6 kg

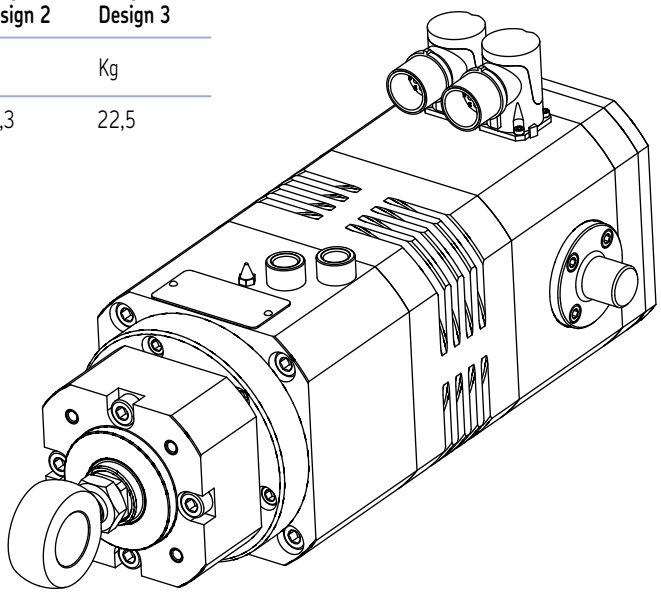

CEMC2104-170-1-D63L - Design 1

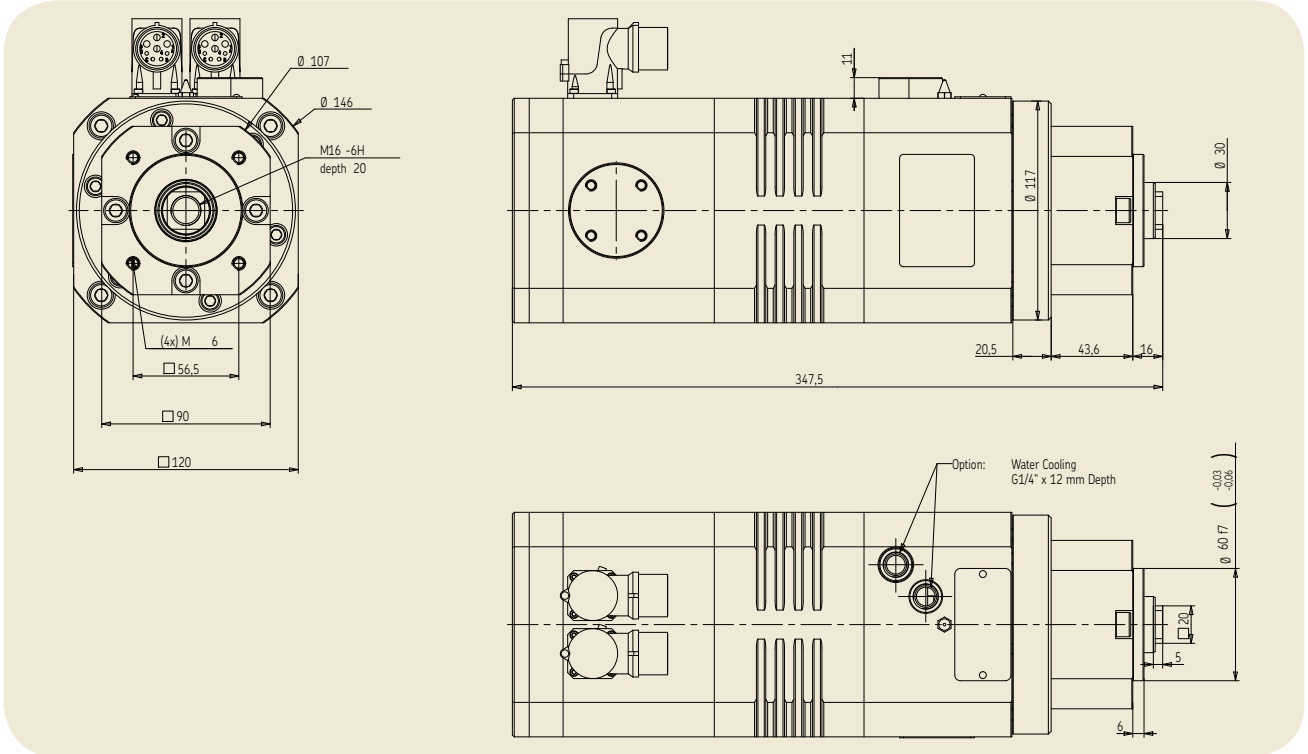

CEMC2104-170-2-D63L - Design 2

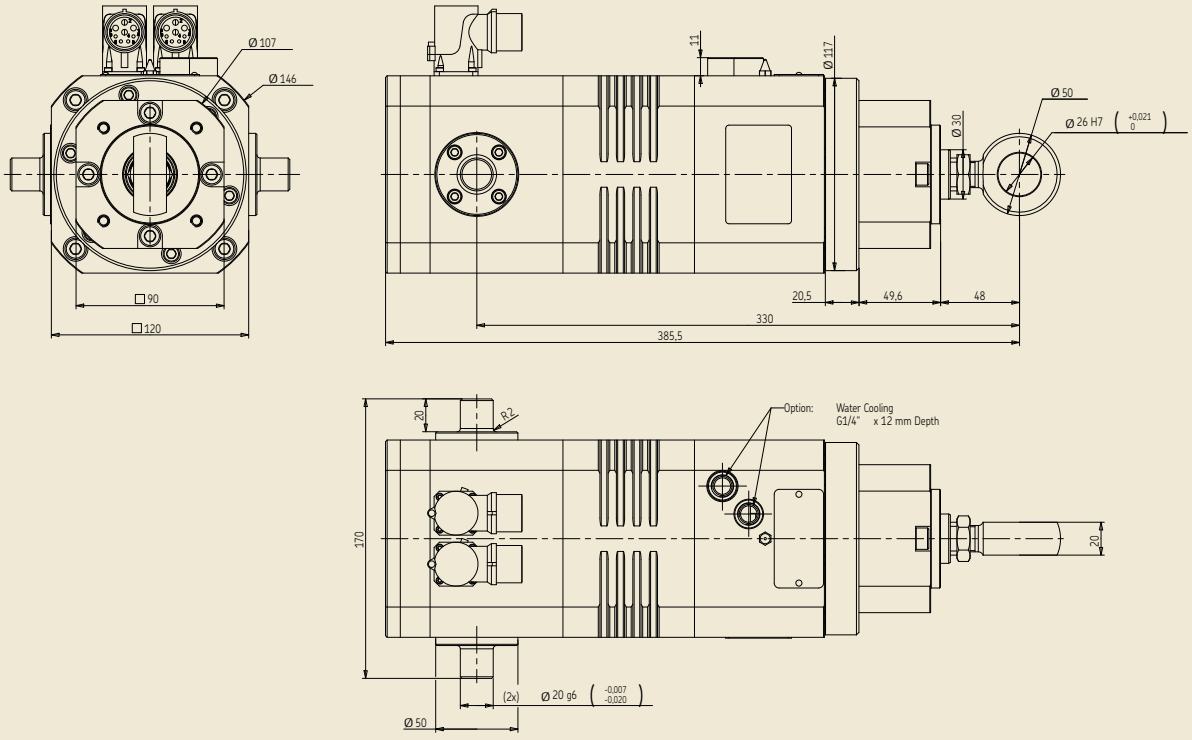

CEMC2104-170-3-D63L - Design 3

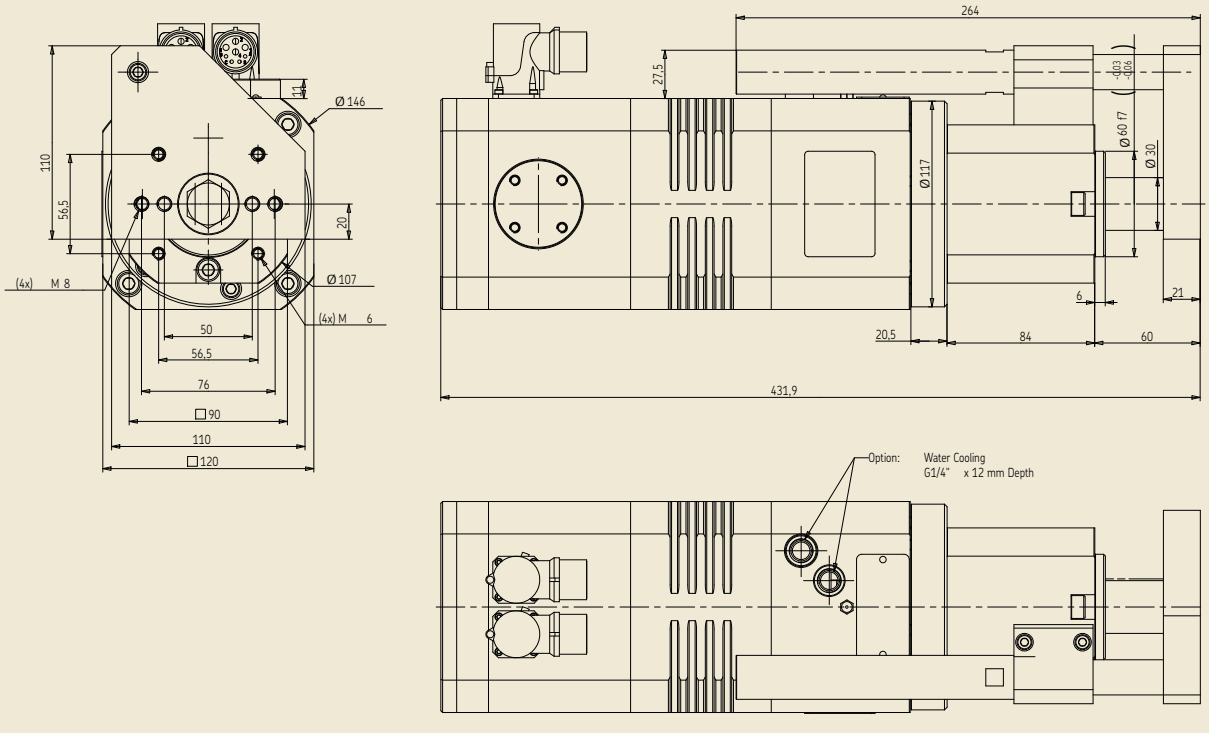

Dimensional data

Designation	Standard stroke	L*	Lt*	Weight**
	mm	mm	mm	Kg
CEMC2404-•••-2-D82P	90	210	345	19,9
	170	290	425	21,5
CEMC2406-•••-2-D82P	90	210	345	19,9
	170	290	425	21,5

* For Brake option, no added length
** For Brake option, add 0,6 kg

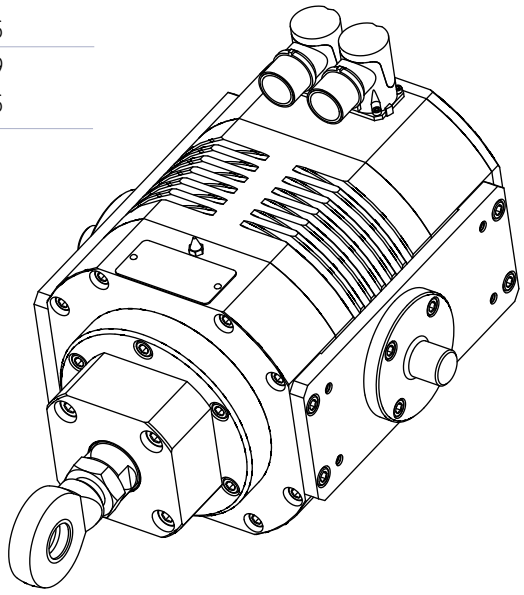

CEMC24••-•••-2-D82P - Design 2

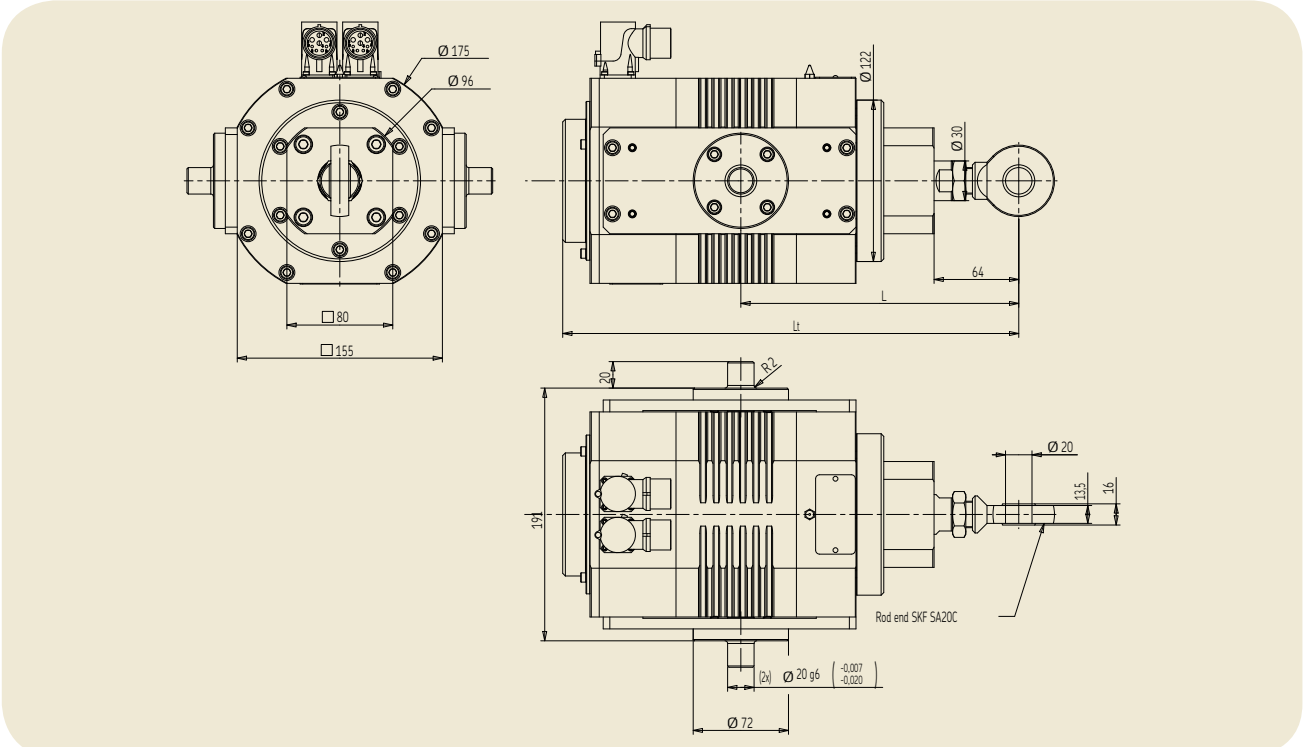

Dimensional data

Designation	Standard stroke	L*	Lt*	Weight**
	mm	mm	mm	Kg
CEMC3004-•••-2-D82P	90	250	378	24,5
	170	330	458	26,9
CEMC3006-•••-2-D82P	90	250	378	24,5
	170	330	458	26,9
CEMC3004-•••-2-D84H	90	280	438	32,7
	170	300	458	34,3
CEMC3006-•••-2-D84H	90	280	438	32,7
	170	300	458	34,3
CEMC3004-•••-2-D86F	90	300	498	40,9
	170	300	498	42,4
CEMC3006-•••-2-D86F	90	300	498	40,9
	170	300	498	42,4

* For Brake option, no added length
** For Brake option, add 0,6 kg

3

CEMC30••-•••-2-D8•• - Design 2

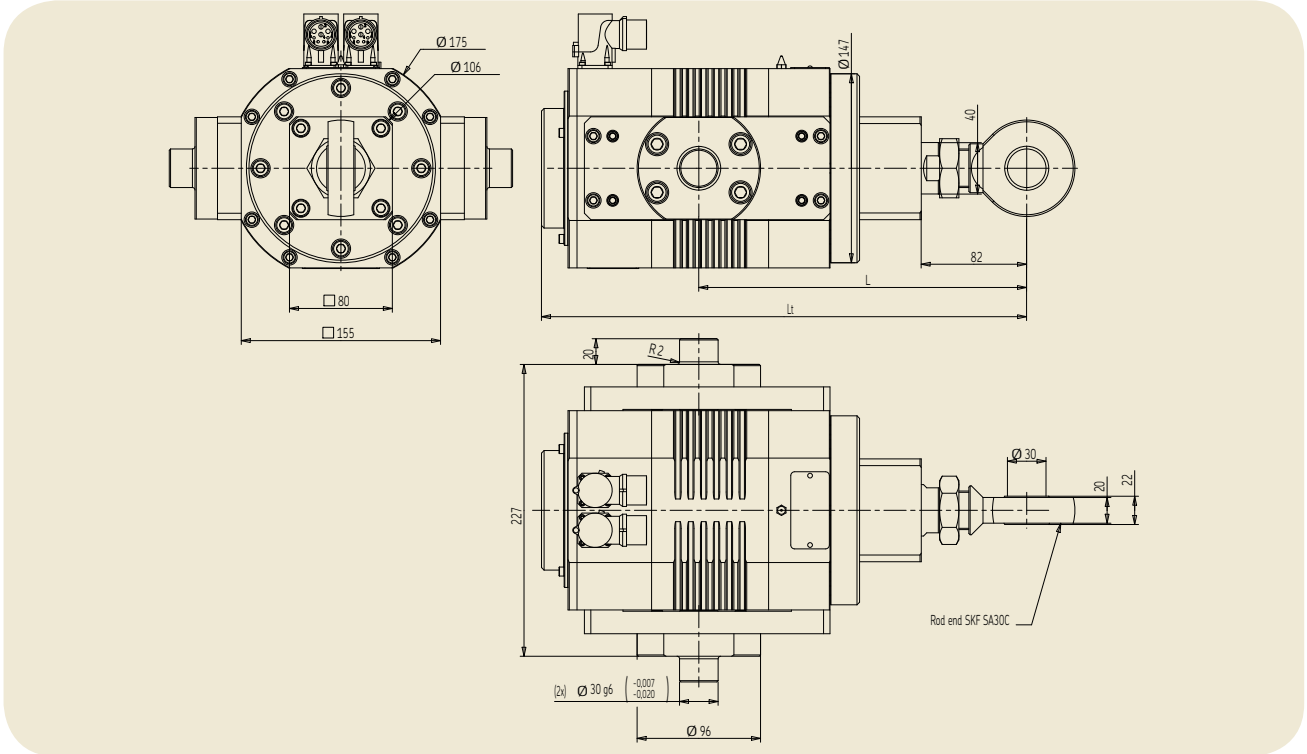

Options: Integrated load sensor

Close to the applied load, this sensor permits accurate measurements of the force applied by the compact cylinder.

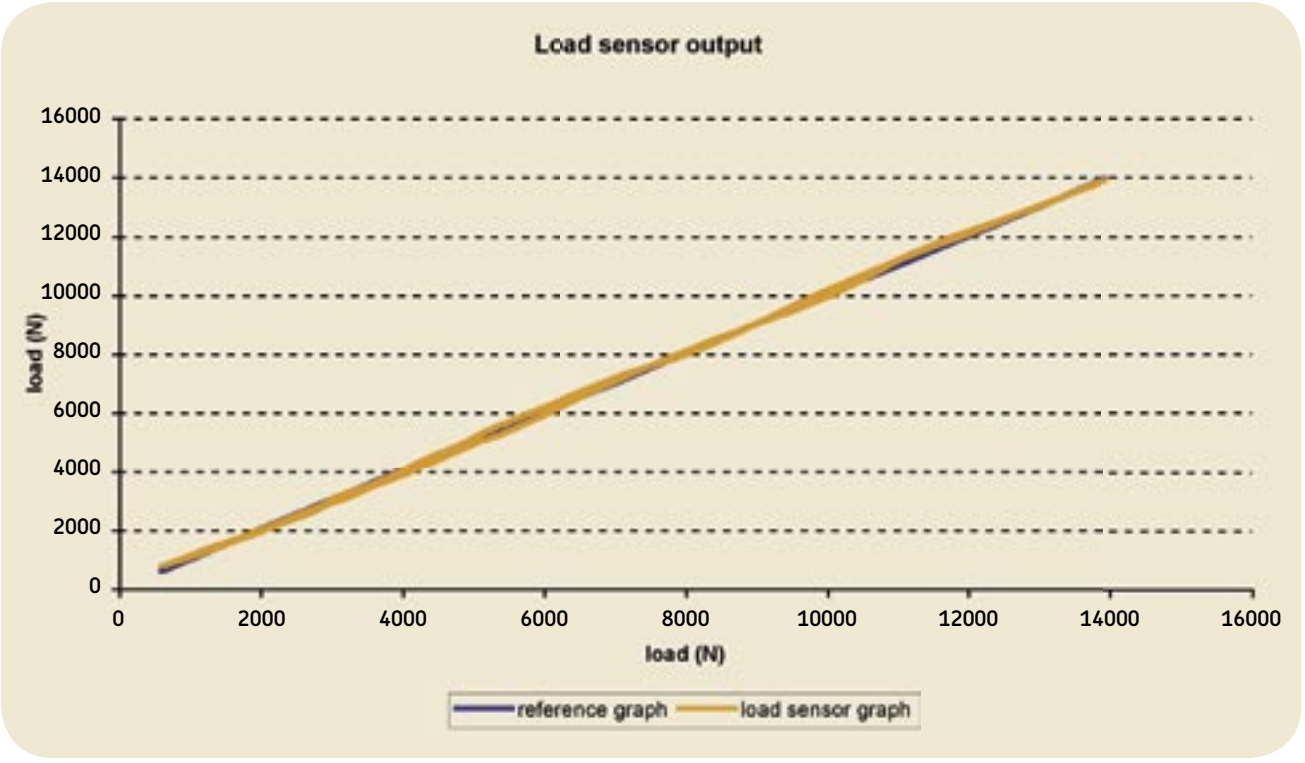

Design strengths:

- accurate measurement
- no external cable
- conditioning electronic card integrated in cylinder
- easy connection
- load sensor option doesn't change cylinder dimension: easy retrofitting.

Technical specification:

• Rated force (F_{nom}):	14 kN
• Accuracy:	+/-3 % of F_{nom}
• Operating temperature range:	+ 10...70 °C
• Sensor voltage supply:	24 V DC +/-10 %
• Sensor output signal:	1 V = 2 kN
• Zero adjustment:	with potentiometer
• Slope adjustment:	with potentiometer.

Customer benefits:

- quality improvement with process follow-up at any time
- high productivity due to process optimisation (closed loop control).

Applications:

- process industry
- presses
- test benches
- and all applications requiring load accuracy.

Options: Integrated water-cooling system

By using an integrated water-cooling system, a higher level of performance/productivity can be achieved.

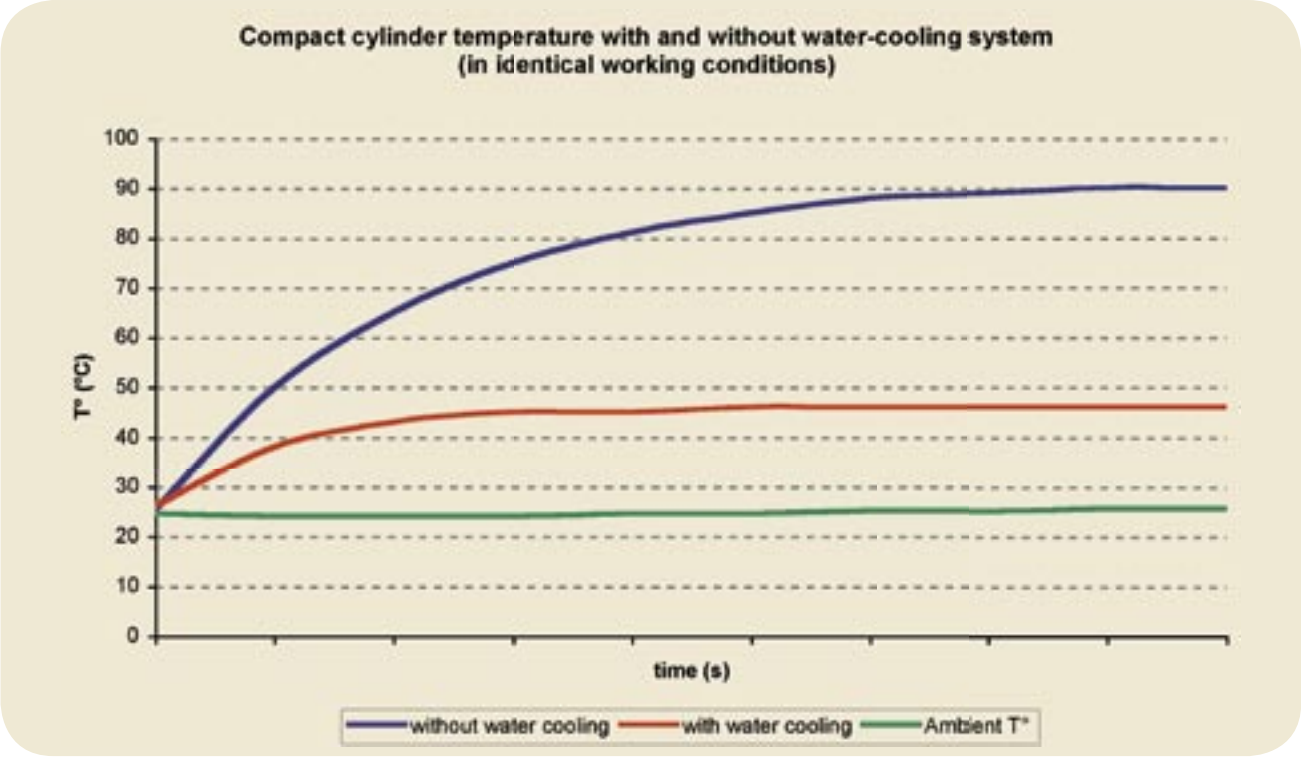

Design strengths:
- high power in small dimensions
- water-cooling option doesn't change cylinder dimension: easy retrofitting.

Customer benefits:
- productivity increase
- cylinder temperature stabilized.

Applications:
- industry automation
- high duty process industry.





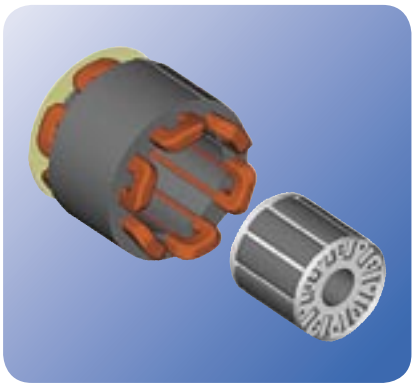

Motion controllers for ElectroMechanical Cylinder

EMC motion controllers integrate in one compact unit the functions of speed controller, motion controller and PLC as well as powerful CANopen or PROFIBUS network possibilities.



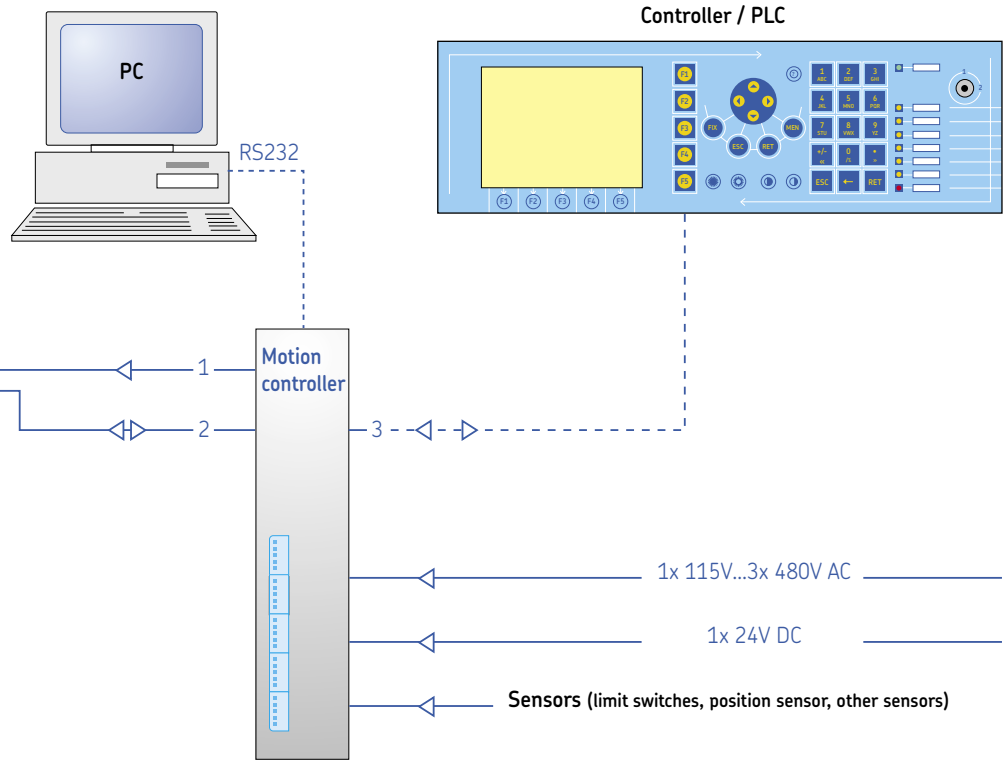

(1) motor cable
(2) resolver cable
(3) possible communications with external automation environment -if necessary-: numeric/analog inputs/ outputs, CANopen or PROFIBUS network.

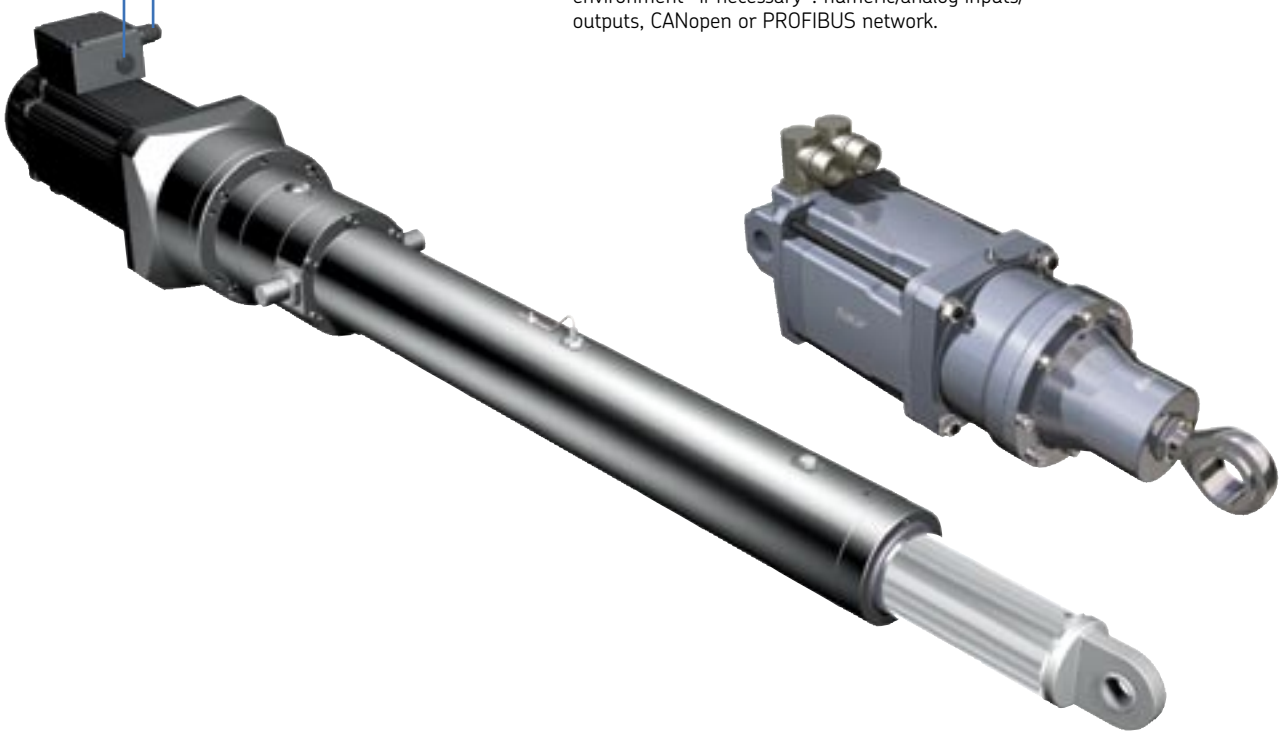

Main specifications



Power supply	380/400 V AC ± 10 %, three phase; 50/60 Hz (1)
Ambient	0-40 °C (derate 20 % / 10 °C up to 60 °C max)
Braking	Integrated or external resistor or regenerative (see table 2)
Input/Output	1 Analog input (± 10 V diff. 14 bits) 1 Analog output, free assignment (± 10 V; N/A conversion 10 bits) 16 Opto-isolated digital inputs (from which 4 interruptive inputs), free assignment 8 Opto-isolated digital outputs, free assignment Standard: Resolver input Option: multitturn absolute resolver input Possible additional board: (2) * incremental encoder input * incremental encoder emulation output * SinCos encoder input
Field bus	CANopen (DS 301 and DSP 402) PROFIBUS (DP-V0 and DP-V1; PROFIdrive V2.0 and PROFIdrive V3.0 Class 3 and 4)

Current bandwidth	600 Hz at -3 dB
Position bandwidth	Up to 60 Hz
Mechanical protection	IP 20 under CEI 529.
Electrical protections	Galvanic insulation of power bridge Mean current protection for drive rating Pulse current protection of drive and motor Rms current protection of motor Short circuit protection at bridge output Mains network overvoltage
Other monitoring features	Tracking error Motor temperature Drive temperature Resolver fault Brake supply Limit switches
Storage temperature	-30 °C - +85 °C

(1) Other voltage on request
(2) See accessories

Detailed specifications

Table 1 - Performances and dimensions

Controller size	Nominal output current	Peak. output current	Mechanical power (3x400V)	Max. losses from controller (at max. power)	Dimensions H	W	D
-	Â	Â	kW	W	mm	mm	mm
02	2	4	0,75	30	328	78	222
04	4	8	1,5	50	328	78	222
08	8	16	3	100	328	110	222
16	16	32	6	200	328	133	222
32	32	64	12	400	328	168	226
50	50	80	20	700	438	202	244
100	100	120	40	1000	474	483	343

Table 2 - Braking capacity specification

Controller size	Type	Resistor value	Max. braking capacity- Permanent power	Max. braking capacity- Pulse power	Pulse power- Max. time	Pulse power- Max. time percentage on total cycle time
-	-	Ω	kW	kW	s	%
02	Internal resistor	220	0,06	2,2	0,1	2,7
04	Internal resistor	220	0,06	2,2	0,1	2,7
08	Internal resistor	82	0,25	6	0,2	4,3
16	Internal resistor	41	0,50	12	0,2	4,3
32	Internal resistor (1)	27	0,70	18	0,2	4,3
50	Regenerative	-	20,00	20	-	-
100	Regenerative	-	40,00	40	-	-

(1) Option: use of external resistor (see accessories)

Compliance with “CE” standards:

The CE marking is affixed on the front panel.

EMC Motion Controllers have the CE marking under European Directive EC 89/336 amended by Directive EC 93/68 on electromagnetic compatibility.

This European Directive calls the harmonized generic standards EN50081-2 of December 1993 (Electromagnetic compatibility - Generic emission standard - Industrial environment) and EN50082-2 of June 1995 (Electromagnetic compatibility - Generic immunity standard - Industrial environment).

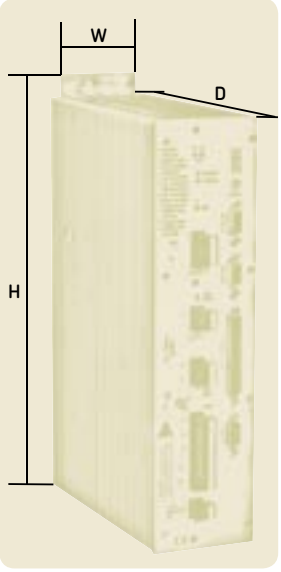

Functions

High-level integration
EMC Motion Controllers incorporate the functions of variable speed control, programmable logic controller and numerical control in a single compact unit.

This integration means a single programming language can be used, the overall cost of the application used, reducing then the overall cost of the application. Commissioning and use are consequently even more simplified.

A real-time, multi-task structure
The entire range is developed around a single structure which includes:
- a motion program
- a background task program: sensor-actuator input/ output processing (e.g. machine safety features)
- a rapid, fixed cycle time plc program for periodic information processing
- special programs tripped by interrupt-type inputs.

This structure operates in real time. There is therefore no prior block preparation, and speed and acceleration destination type parameters can be modified during motion.

Rapid and precise motion
EMC Motion Controllers integrate advanced servocontrol characteristics:
- high resolution position measurement (65536 increments per revolution)
- servocontrol filter
- reconstruction of master / slave paths and use of predictors.

Thus, anticipated action makes movements precise, even at low speeds and high forces; tracking error remains virtually zero over the entire speed range for optimal response.

Rapid intervention in the event of breakdown
- The firmware and device-specific parameters (operating time, latest faults, device serial number) are saved in the device's non-volatile memory.
- The installation parameters (parameters related to drive rating, cylinder motor, positioning and machine setup) and user programs (executable source and code) are backed up in non-volatile memory mounted on a plug-in board for easy maintenance.

Complete internal supervision for safe operation
EMC Motion Controllers incorporate supervision of most of the servosytem's important parameters and actions: voltages, currents, temperature, motion... for safe operation.

Motion Explorer Software

Motion Explorer is a Windows based software for set-up, adjustment, supervision and maintenance. It works on Windows 98, Millenium, NT 4.0, 2000, XP. The detailed functions are following:

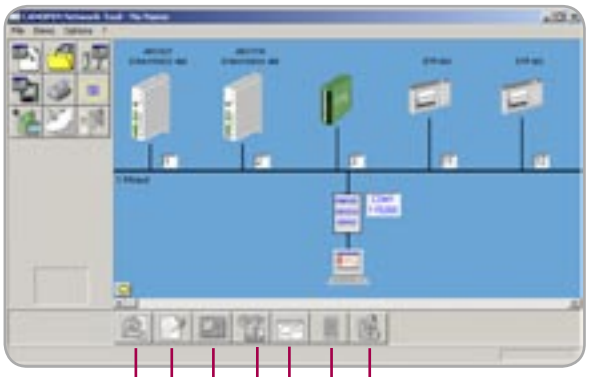

Diagnostic aid tool
Incident diagnostics
Firmware updates

Execution control tool
Program debugger

Stimulus generator tool
Function generator for adjusting servocontrol parameters

Variable observer tool
Variable observer for displaying and forcing internal variables

Oscilloscope tool
4 channels
Time base adjustable from 5 ms/div to 200 s/div
Adjustable trigger (limit + edge type)
Measurements (RMS, peak-to-peak, mean, min, max.)
Trace depth from 200 to 2000 points (5 ms to 5.5 hours).

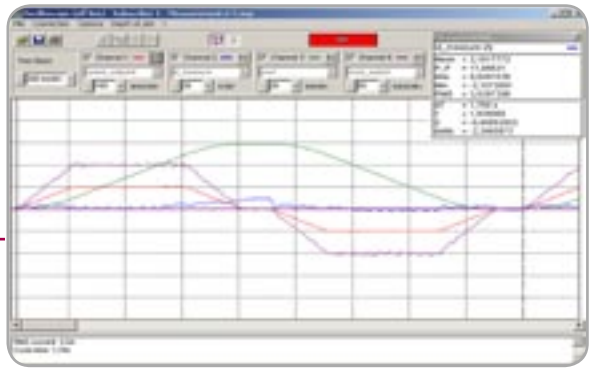

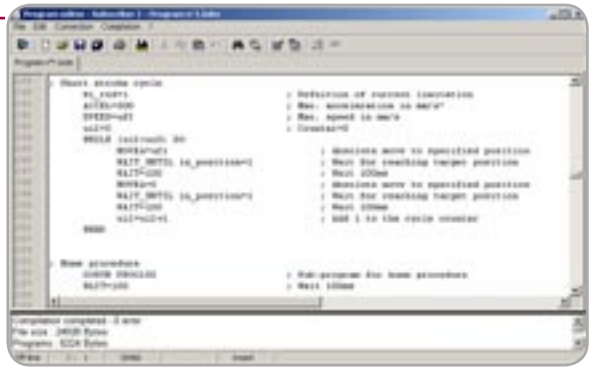

Program editor tool
Very powerful programming
Access to all real-time parameters
Library of application programs and examples
Pseudo-basic language
Compilation with error localization

Parameter setting tool
Axis, motor, resolver, I/O parameters, motor selection from data base.
Servocontrol setting assistant.
Resolver timing

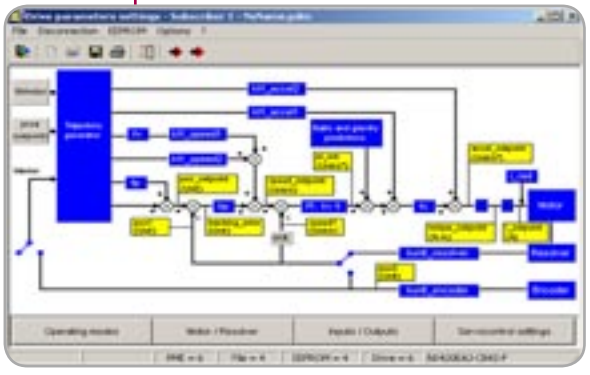

Accessories

Parameter setting package
The parameter setting package is only required for setting up EMC motion controller. Then it can also be used for adjustment, supervision or maintenance purposes. It includes hardware equipment making link between EMC motion controller and a PC with Windows operating system, and Motion Explorer software.

Depending on the selected fieldbus for EMC motion controller, parameter setting package definition is following:

- Parameter setting package for CanOpen EMC Motion Controller:
Reference: SFWPVXMCC
includes:
  - Motion Explorer Software (CDRom)
  - CanOpen cable (length 1 m)
  - CanOpen-RS232 interface
  - RS232 Cable (length 1,8 m)

- Parameter setting package for CanOpen EMC Motion Controller (DIN mounting):
Reference: SFWPVXMCCD
includes:
  - Motion Explorer Software (CDRom)
  - CanOpen cable (length 1 m)
  - CanOpen-RS232 interface (DIN mounting)
  - RS232 Cable (length 1,8 m)

- Parameter setting package for Profibus EMC Motion Controller:
Reference: SFWPVXMCP
includes:
  - Motion Explorer Software (CDRom)
  - Profibus cable (lengih 1 m)
  - Profibus-USB interface
  - USB Cable (length 1,8 m)

Mains filters
EMC motion controller complies with standard EN55011 with a filter on the power input.
Depending on controller size, filter references are following:

Controller size	Mains filter reference
02	FLTPVX3PH016A
04	FLTPVX3PH016A
08	FLTPVX3PH016A
16	FLTPVX3PH016A
32	FLTPVX3PH036A
50	FLTPVX3PH036A
100	FLTPVX3PH064A

External braking resistor (only for controller size 32)
Reference: RSTPVX32
Specifications:
- Resistor value: 27 Ω
- Max. braking capacity - Permanent power: 2 kW
- Max. braking capacity - Pulse power: 18 kW
- Pulse power - Max. time: 0,5 s
- Pulse power - Max. time percentage on total cycle time: 12 %

Optional board for EMC Motion controller
If required, it's possible to add in Motion Controller one of the three following optional boards:

- Reference: B0APVX39
Designation: Encoder emulation output option.
Description: This optional board, fitted in the motion controller, converts signal from cylinder resolver into a series of pulses identical to those from an incremental encoder outputs: A, $\overline{A}$, B, $\overline{B}$, Zero mark, $\overline{\text{Zero mark}}$.

- Reference: B0APVX38
Designation: External encoder input option.
Description: This optional board, fitted in the Motion Controller, is used to connect an external incremental encoder which may be used:
  - either as a master axis for synchronization with an external moving component.
  - or as a position measuring device if position measurement given by cylinder resolver is unsuitable (example: position has to be measured on the part moved by cylinder).
    Caution: in this case, cylinder resolver must be connected nevertheless.
  - or as a position measuring device for motion control.

- Reference: B0APVX45
Designation: SinCos encoder input option.
Description: this optional board, placed in the motion controller, is used to connect a SinCos encoder which acts as a position measurement unit for applications requiring both high rotational speed and significant resolution.

Limit-switches
Limit-switches integrated in the cylinder can be connected directly to the EMC Motion Controller. Limit-switch specifications are following:

- Technology: Inductive proximity switch
- Electrical Design: DC PNP
- Output: Normally Closed
- Operating voltage (V DC): 10..36
- Current rating (mA): 100
- Voltage drop (V): < 2,5
- Current consumption (mA): < 10 (24 V)
- Protection: IP68

Home sensor
Home sensor integrated in the cylinder can be connected directly to the EMC Motion Controller. Home sensor specifications are following:

- Technology: Inductive proximity switch
- Electrical Design: DC PNP
- Output: Normally Opened
- Operating voltage (V DC): 10..36
- Current rating (mA): 100
- Voltage drop (V): < 2,5
- Current consumption (mA): < 10 (24 V)
- Protection: IP68

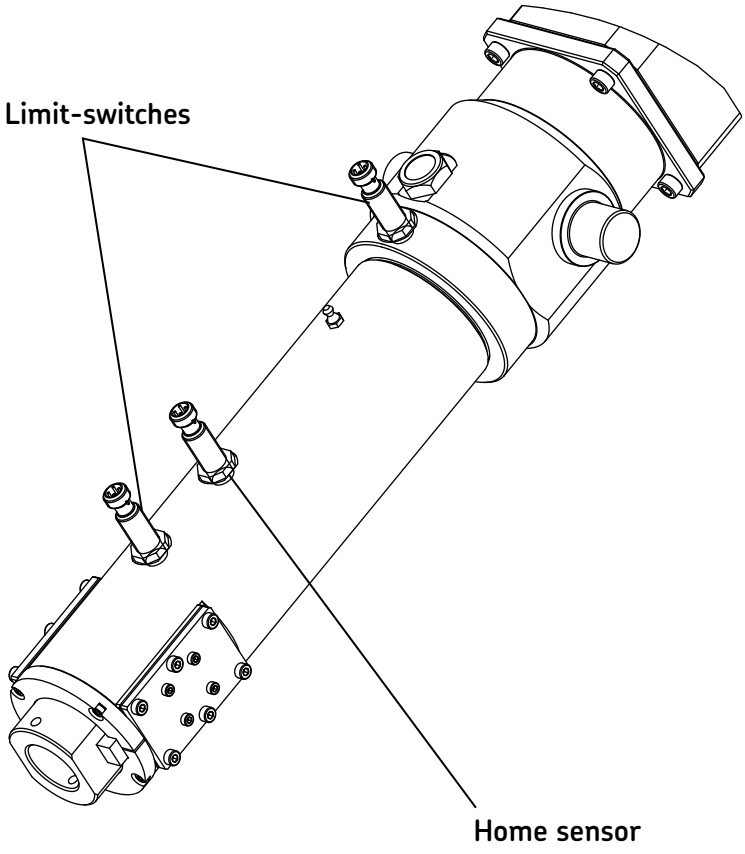



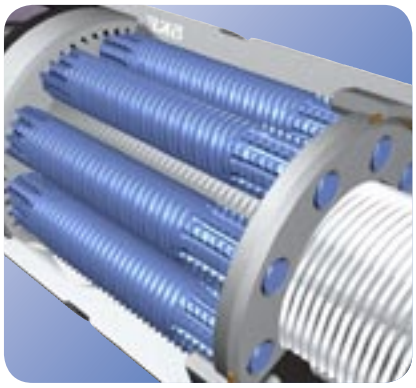

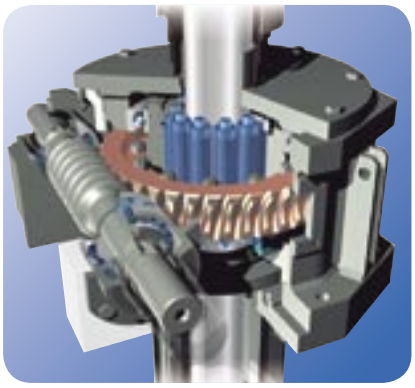

Roller Screw Jack Actuators

SKF Roller Screw Jack Actuators (RSJA) employ an SKF spherical roller thrust bearing that supports a roller screw nut.

By using rollers as rolling elements the system permits lowering and raising of heavy loads with high efficiency and high reliability. It provides an overall efficiency as high as 70 % in some models depending on the ratio of the worm gear set.



Experience

Through twenty five years of partnership with the global steel industry, SKF has continuously improved the art of linear actuation in this demanding environment, using the unique features of SKF roller screw - based jack actuators.

More than 60 continuous steel casting machines, in 23 countries have been operating without roller screw failures. The average life of all these screws is over 12 years, the oldest in service exceeded 22 years so far.

About the Screw Jack Actuator

The design of the screw jack is based on a rotating nut.

A worm gear drives the rotating nut. The gear and screw system is guided by a bronze ring and two bearings, a ball bearing and spherical thrust bearing in order to maintain an even load distribution.

The load carrying capacity of the screw jack depends on the size of the roller screw. (This design only permits a load in compression). The steel welded gearbox gives a robust design at an optimised cost. A solid tube extending from the base, is used to guide the screw shaft and its antirotation.

Two tubes are inserted around this shaft to facilitate oil splash lubrication, which is essential when operating non stop in the steel industry.

The bottom of the gearbox can be spherical if desired, thus improving screwjack alignment during assembly. The top link between the jack and surrouding frame is also spherically joined.

Additional protection for the screw is provided by telescopic metal bellows; Kevlar bellows are available on request.

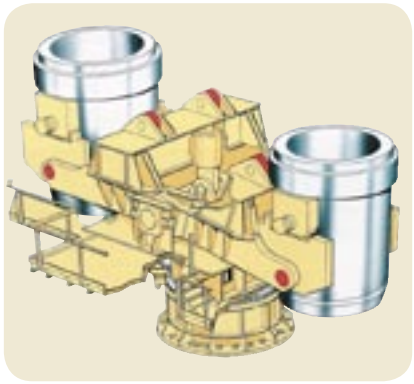



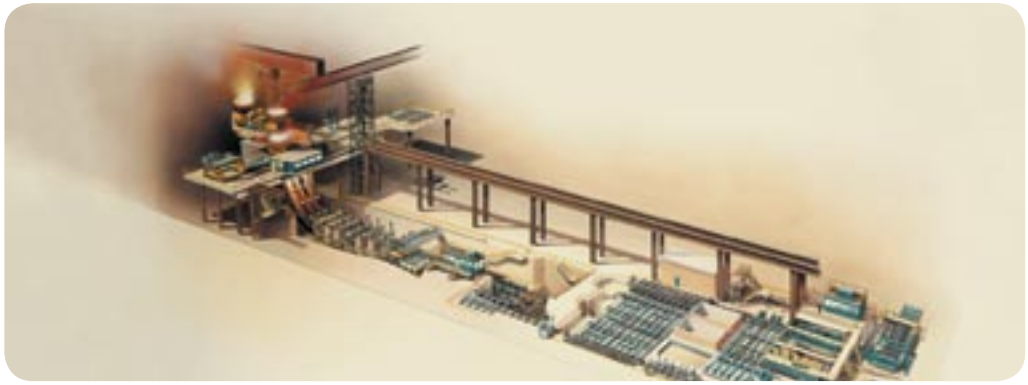

Performance specifications

	RSJA75	RSJA99	RSJA120	RSJA150	RSJA180
Capacity (metric tons)*	25	45	50	70	90
Max. laod (metric tons)	32	50	80	100	160
Ø of lifting roller screw	75	99	120	150	180
Lead	20	35	25	25	30
Gear centers	160	200	250	280	355
Ratios'gear std	5/7,5/10/15	5/7,5/10/15	5/7,5/10/15	7,5/10/15	7,5/10/15
Turn of worm / 100 mm raise	5xgear ratio	20/7xgear ratio	4xgear ratio	4xgear ratio	10/3xgear ratio

Dimensional specifications

Dimensions	RSJA75	RSJA99	RSJA120	RSJA150	RSJA180
A	455	595	670	760	930
B	245	300	360	410	510
C	210	295	310	350	420
D	420	590	620	700	840
E	210	295	310	350	420
F	210	295	310	350	420
G	610	690	850	950	1170
H	305	345	425	475	585
I	305	345	425	475	585
J	110	110	140	140	170
K	160	200	250	280	355
L	200	200	200	200	200
M	50	50	50	50	50
N	25	25	25	25	25
O	520	575	635	685	785
P	20	20	20	20	20
Q	50	50	50	50	50
R	310	375	430	480	590
S	125	165	165	205	235
T	85	85	85	85	85
U	210	250	250	290	320
V	460	465	510	535	620
W + stroke	205	230	250	280	310
X + stroke	855	920	1010	1105	1250
Y	180	210	260	260	260
Z	235	260	280	310	340
AA	300	405	430	510	650
AB	350	460	500	580	720
AC	420	590	620	700	840
AD	40h6	50h6	60h6	70h6	90h6

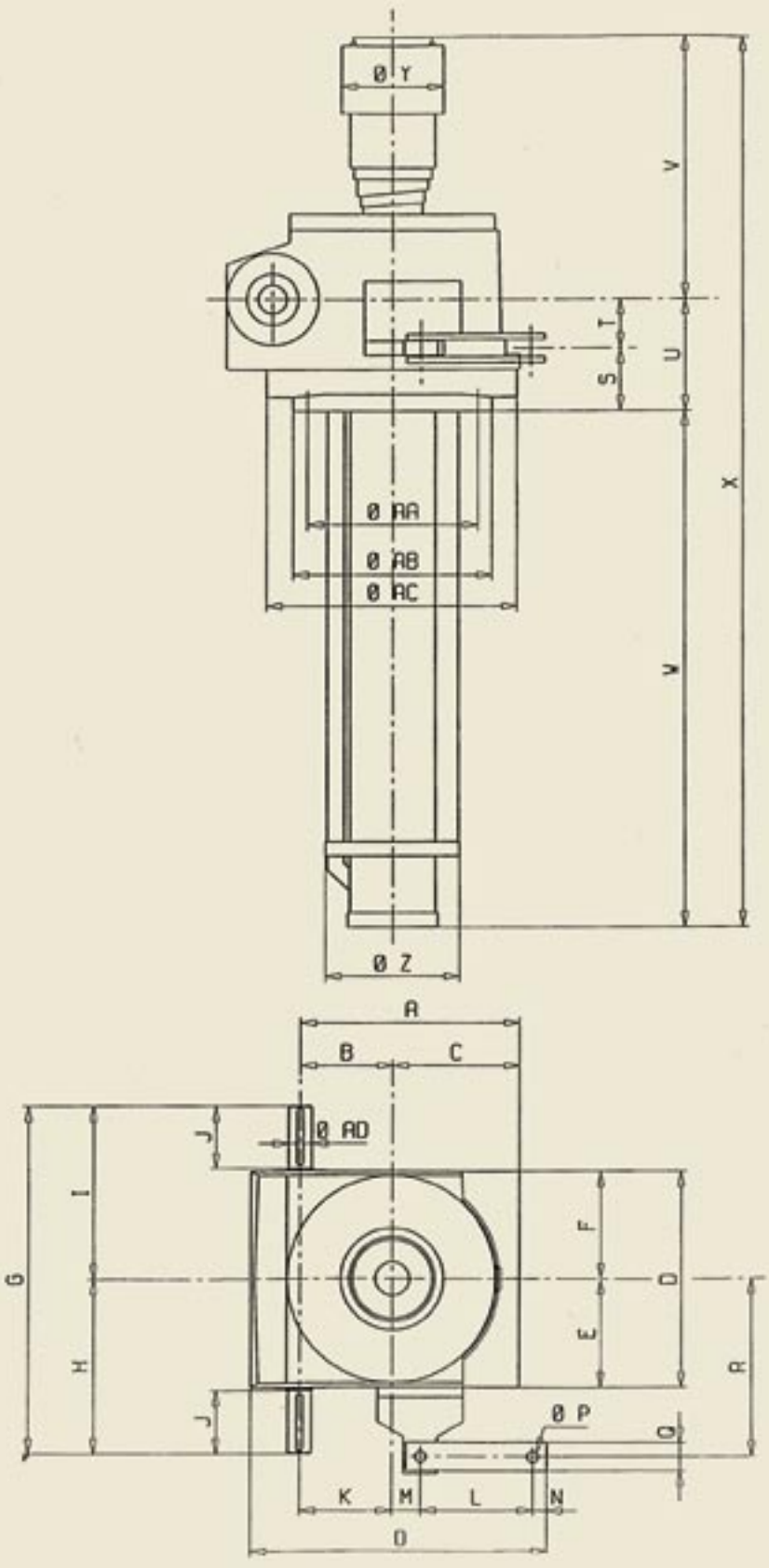
Ø Y
V
T
S
U
X
Ø AA
Ø AB
Ø AC
W
Ø Z
A
B
C
J
Ø AD
I
G
F
D
E
H
R
J
Ø P
Q
K
M
L
N
O

Main benefits

- Move loads and apply forces more efficiently and more reliably than all other types of mechanical actuators
- Enable faster operation and longer travel under high load
- Require less power
- Transmit high power without overheating
- Ensure correct functioning even in adverse environments such as dirt or poor lubrication. Consult SKF.
- Robust design to withstand shock loads.

Performances

Example with an average speed of 1,5 m/min and an operating time of 2 000 hours:

a dynamic carrying capacity of	**will be lifted by a roller screw of**	
25 tons	**diameter**	**75 mm**
45 tons	**diameter**	**99 mm**
50 tons	**diameter**	**120 mm**
70 tons	**diameter**	**150 mm**
90 tons	**diameter**	**180 mm**

Technical requirements

for SKF electromechanical cylinders

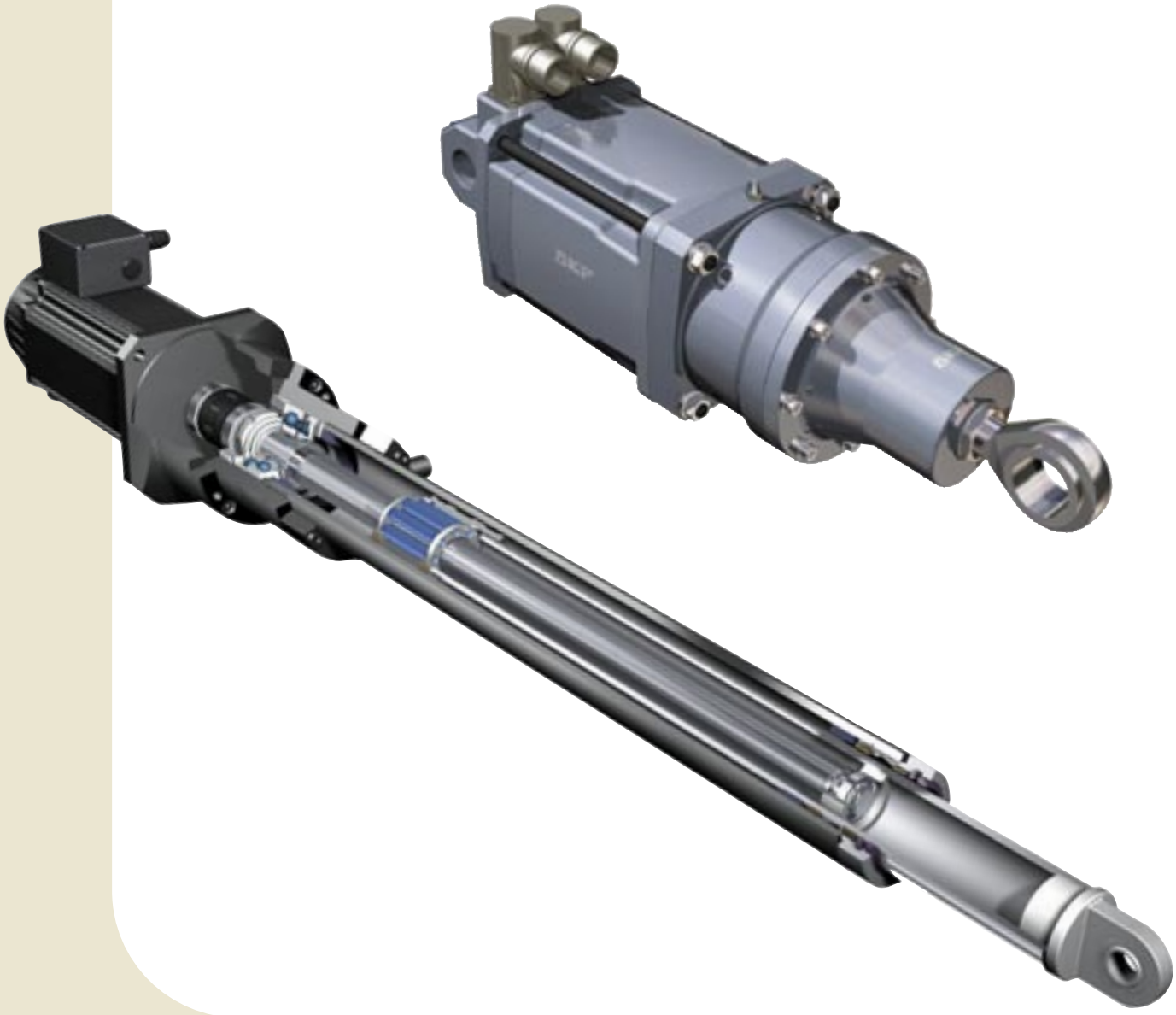

SKF

SKF Electromechanical cylinder technical requirements

(to be sent to your local SKF representative)

From: .....

Attention: .....



- **Company name:**
- **Customer contact for technical questions** **phone number** **email**
- **Application:**
- **Estimated load:** (Explain all factors included. ie mass moved by the actuator, friction, inertia load during acceleration etc):
- **Estimated stroke:**
- **Estimated maximum cylinder speed and total cycle time** (pushing and pulling)**:**
- **Number of cycles/hrs, hrs/day, days/wk, wks/yr.:**
- **Estimated mass of all components moved by the cylinder:**
- **Lifetime required:**
- **Special environment** (gas or fluid contacts, high or ambient temperature, contaminants)
- **Number of cylinders for this quotation:**
- **Quotation due date:**
- **Delivery requirement for prototype / first off:**
- **Future potential for identical cylinders:**

Application sketch (please indicate if vertical or horizontal and masses moved by the cylinder)**:**

- If the customer needs a short total cycle time (<6s) or has a fully determined positioning cycle, please complete page 2.
- If the customer needs a servomotor and a servoamplifier please complete page 3.

SKF Electromechanical cylinder technical requirement

For a fully determined positioning cycle or short total cycle time (<6s), please complete both graphs keeping the link between the time / x-axis on both.

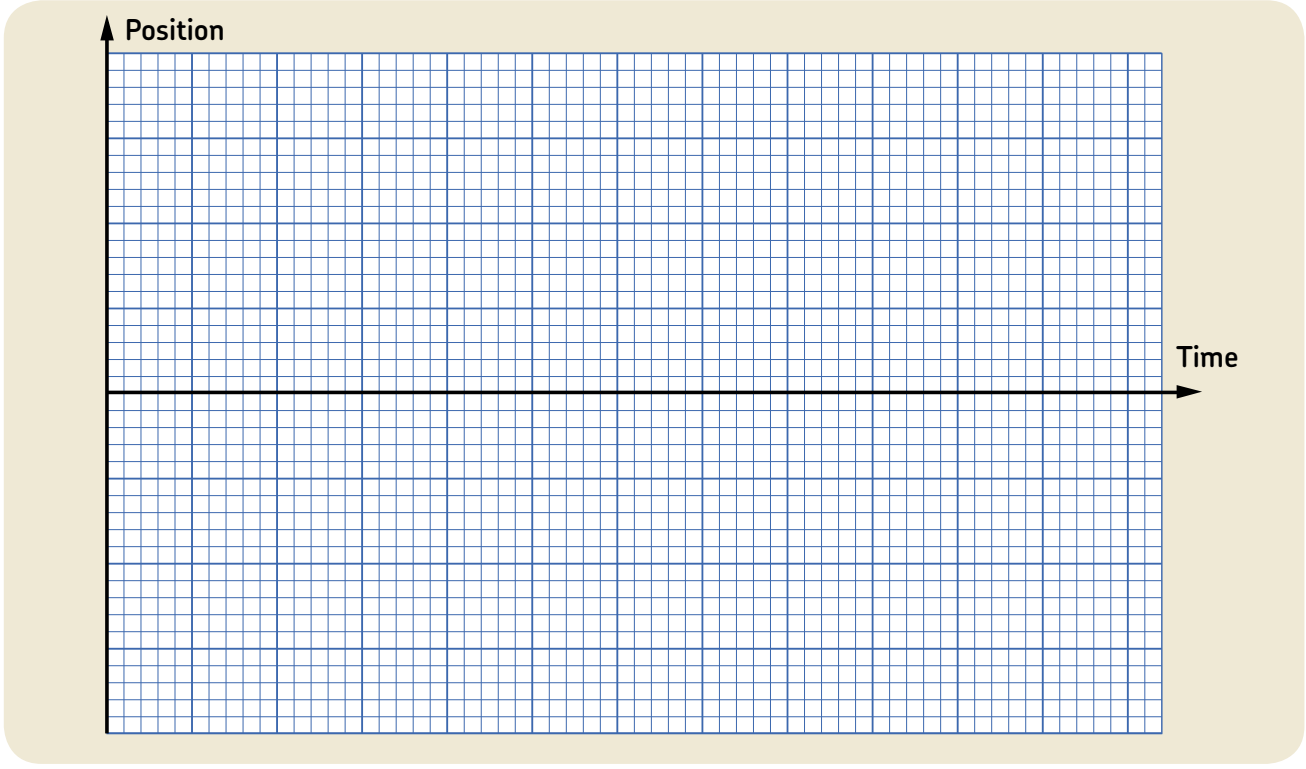

* Please indicate units of load (ex kN), position (ex mm) and time (ex s).
* Please draw 2 successive cycles in order to show the waiting time between each cycle.
* Please indicate when the cylinder is pushing and pulling.

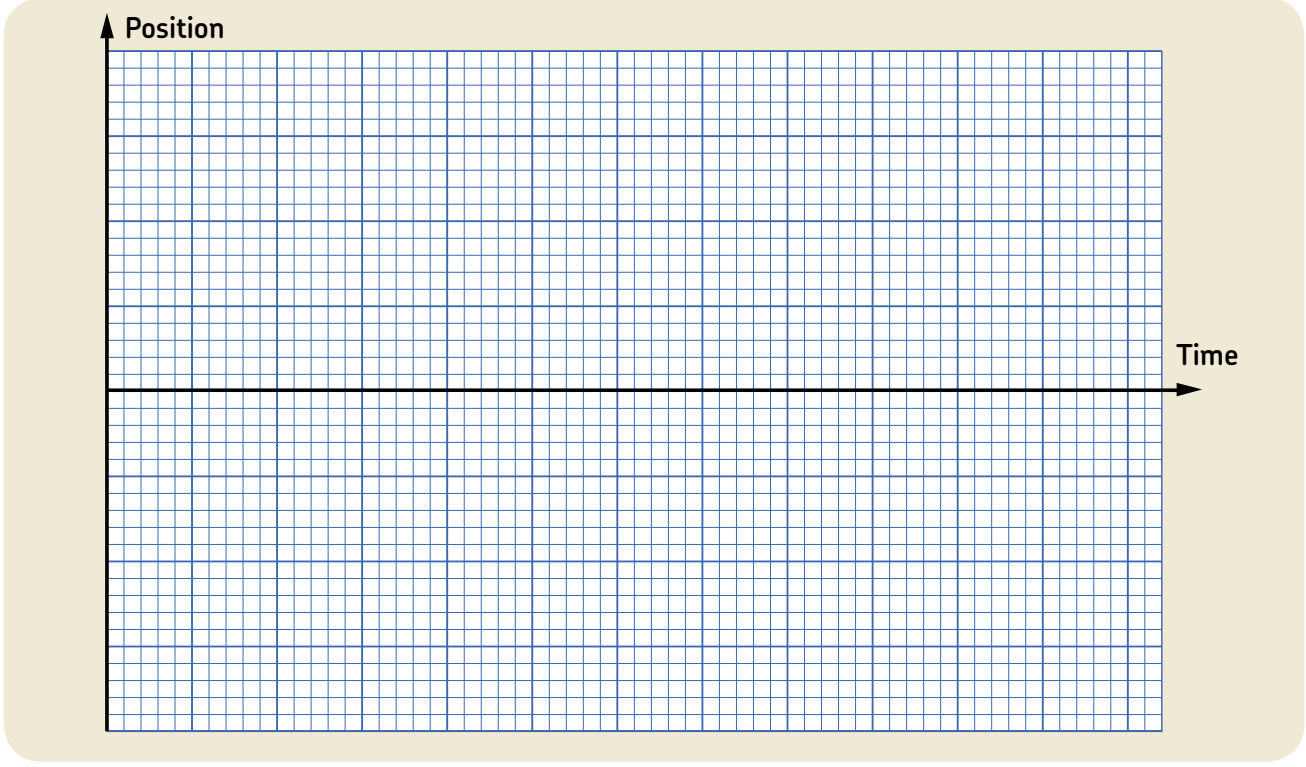

SKF Electromechanical cylinder technical requirement

Automation environment description

Mains supply type (number of phases, voltage, AC or DC, frequency: ie 3x480 VAC 50 Hz)

.....

.....

.....

Is there a main controller/PLC that manages several axis controllers (in addition to managing SKF cylinders) ?

Yes

To best understand the technical requirement please advise the exact reference of the main controller / PLC

.....

.....

What type of field bus could the main controller / PLC use to communicate with the axis controllers ?

- ❑ CanOpen
- ❑ Profibus
- ❑ Sercos
- ❑ RS232
- ❑ Other : Give the name:
- ❑ No field bus determined at the moment
- ❑ No field bus because axis controllers are integrated in the main controller/PLC

➜ Give exact reference of axis controller and kind of feedback required (TTL, SSI/ROD...) :

.....

.....

.....

Are axis independant ?

No

Describe the dependencies between the SKF electromechanical cylinder and other axies:

.....

.....

.....

.....

.....

.....

Then :

No

Describe what actuation tasks are required from the SKF actuator and how these are stopped and started:

.....

.....

.....

.....

.....

.....

.....

.....

.....

.....

.....

.....

Yes

Linear Motion
Ball & Roller screws







Contacts

Linear motion from SKF
www.linearmotion.skf.com

Benelux
SKF Multitec Benelux B.V.
Nederland
Tel +31 030 6029 029
Fax +31 030 6029 028

België & Luxembourg
Tel +32 25 024 270
Fax +32 25 024 336
E-mail multitec_benelux@skf.com

Danmark
SKF Multitec
Tel +45 65 92 77 77
Fax +45 65 92 74 77
E-mail customerservice.multitec@skf.com

Deutschland
Magnetic Elektromotoren GmbH
Tel +49 7622 695 0
Fax +49 7622 695 101
E-mail magnetic.germany@skf.com

SKF Linearsysteme GmbH
Tel +49 9721 657 0
Fax +49 9721 657 111
E-mail lin.sales@skf.com

España & Portugal
SKF Productos Industriales S.A.
Tel +34 93 377 99 77
Fax +34 93 474 2039 /
3156 / 2156
E-mail prod.ind@skf.com

France
SKF Equipements
Tel +33 1 30 12 73 00
Fax +33 1 30 12 69 09
E-mail equipements.france@skf.com

Italia
SKF Multitec S.p.A.
Tel +39 011 22 49 01
Fax +39 011 22 49 233
E-mail multitec.italy@skf.com

Norge
SKF Multitec
Tel +47 22 90 50 00
Fax +47 22 30 28 14
E-mail customerservice.multitec@skf.com

Schweiz
Magnetic
Tel +41 52 305 02 02
Fax +41 52 305 02 05
E-mail magnetic.switzerland@skf.com

SKF Linear Motion
Tel +41 1 825 81 81
Fax +41 1 825 82 82
E-mail skf.schweiz@skf.com

Suomi
SKF Multitec
Tel +358 9 615 00 850
Fax +358 9 615 00 851
E-mail customerservice.multitec@skf.com

Sverige
SKF Multitec
Tel +46 42 25 35 00
Fax +46 42 25 35 45
E-mail customerservice.multitec@skf.com

U.K.
SKF Engineering Products Ltd.
Tel +44 1582 496 735
Fax +44 1582 496 574
E-mail skf.epl@skf.com

USA & Canada/South America
SKF Motion Technologies
Tel +1 610 861 4800
Toll free +1 800 541 3624
Fax +1 610 861 4811
E-mail motiontech.usa@skf.com

Österreich
Linear Motion
SKF Österreich AG
Tel +43 2236 6709 0
Fax +43 2236 6709 220
E-mail multitec.austria@skf.com

Other countries
Fax +33 47 968 6800
E-mail brs@skf.com

Represented by:

® SKF is a registered trademark of the SKF Group.

© SKF 2005
The contents of this publication are the copyright of the publisher and may not be reproduced (even extracts) unless prior written permission is granted. Every care has been taken to ensure the accuracy of the information contained in this publication but no liability can be accepted for any loss or damage whether direct, indirect or consequential arising out of the use of the information contained herein.

Publication **5338 EN** - 2005-06 Printed in France